Technical Documentation

RBFS Overview and Platform

Version 26.3.1 : latest, 14 October 2026

Table of Contents

1. RBFS Overview . . . 2
  1.1. RBFS At-a-Glance . . . 2
    1.1.1. Modular and Resilient Architecture . . . 2
    1.1.2. Automation and Management Interfaces . . . 2
    1.1.3. Comprehensive Feature Set . . . 3
    1.1.4. Hardware Flexibility and Ecosystem . . . 3
  1.2. Why RBFS . . . 4
  1.3. Architecture and the Key Functional Components . . . 4
    1.3.1. Brick Data Store . . . 5
    1.3.2. Brick Microservices . . . 5
  1.4. Supported Topologies . . . 6
  1.5. Interfaces to Operate and Manage RBFS . . . 7
  1.6. Features and Components . . . 7
    1.6.1. Routing . . . 7
    1.6.2. Layer 2 Services . . . 8
    1.6.3. Multicast . . . 9
    1.6.4. Access and Subscriber Management . . . 10
    1.6.5. RBFS (Hierarchical) Quality of Service . . . 11
    1.6.6. RBFS Carrier-Grade Network Address Translation . . . 11
    1.6.7. Ethernet VPN - Virtual Private Wire Service . . . 12
    1.6.8. RBFS Redundancy . . . 12
    1.6.9. Zero Touch Provisioning . . . 12
    1.6.10. Scalability in RBFS . . . 12
    1.6.11. Security in RBFS . . . 13
    1.6.12. Logging and Observability in RBFS . . . 14
    1.6.13. RBFS Software Installation . . . 14
2. Platform . . . 16
  2.1. Platform Overview . . . 16
    2.1.1. Supported Platforms . . . 17
    2.1.2. End-of-Life Policy . . . 18
    2.1.3. Guidelines and Limitations . . . 18
    2.1.4. Brick Daemon (BD) . . . 18
    2.1.5. Setting Up System Parameters . . . 19
    2.1.6. CPU Watchdog Timer Utility for Hardware Platforms . . . 20
    2.1.7. Displaying Platform Information . . . 21
    2.1.8. Displaying RBFS Version Information . . . 22
    2.1.9. Configuring Platform Profiles . . . 23
  2.2. Platform Hardware Information . . . 29

2.2.1. RBFS Multiservice Edge Image on UfiSpace S9510-28DC . . . 29
2.2.2. RBFS Multiservice Edge Image on Edgecore CSR440 (AS7535-28XB) . . . 30
2.2.3. RBFS Access Leaf and Multiservice Edge Images on UfiSpace S9600-72XC . . . 31
2.2.4. RBFS Access Leaf and Multiservice Edge Images on UfiSpace S9600-102XC . . . 32
2.2.5. RBFS Access Leaf & Multiservice Edge Images on Edgecore AGR420 (AS7946-74XKSB) . . . 33
2.2.6. RBFS Spine Image on UfiSpace S9600-32X . . . 34
2.2.7. RBFS Spine Image on Edgecore AGR400 (AS7946-30XB) . . . 35
2.2.8. RBFS Multiservice Edge Images on UfiSpace S9610-46DX . . . 38
2.2.9. RBFS L2 Wholesale (L2BSA) Image on UfiSpace S9500-22XST . . . 40
2.3. Firmware Versions . . . 43
2.4. Feature Support Matrix . . . 46
2.4.1. Overview . . . 46
2.4.2. Access-Leaf Image . . . 47
2.4.3. Multiservice Edge Image . . . 51
2.4.4. Spine Image . . . 58
2.4.5. L2 Wholesale (L2BSA) Image . . . 61
2.5. Transceiver Support Matrix . . . 64
2.6. Resource Limits/Feature Support . . . 73
2.6.1. Access Leaf Image - Feature/Resource Limits . . . 75
2.6.2. Multiservice Edge Image - Feature/Resource Limits . . . 75
2.6.3. Spine Image - Feature/Resource Limits . . . 76
2.6.4. L2 Wholesale (L2BSA) Image - Feature/Resource Limits . . . 77
2.6.5. Show CLI for Displaying ACL Table Information . . . 79
2.6.6. Static, System, and Dynamic Label Ranges . . . 81
2.7. ACL Match/Action Matrix . . . 83
2.7.1. User-Defined L3v4 ACL . . . 84
2.7.2. User-Defined L3v6 ACL . . . 86
2.7.3. L2 ACL . . . 87
2.7.4. Multifield Classifier (MF) L3v4 ACL . . . 89
2.7.5. Multifield Classifier (MF) L3v6 ACL . . . 91

Gain a quick understanding of RBFS — a cloud-native, disaggregated network operating system purpose-built for today's service provider networks. Learn how its microservices-based architecture, open hardware support, and automation-first design simplify network deployment, scaling, and operations.

Explore the RBFS Platform Guide to discover the hardware platforms supported by RBFS, outlining their key capabilities, feature sets, firmware compatibility, and resource limits. Whether you are evaluating a new deployment or selecting the right platform for a specific network role, this guide provides the essential information to make informed decisions.

The following guides are available under the RBFS Overview and Platforms section:

- RBFS Overview
- Platform Overview

1. RBFS Overview

1.1. RBFS At-a-Glance

RtBrick Full Stack (RBFS) is a carrier-grade network operating system developed specifically for disaggregated telco networks. It supports deployments ranging from small local carriers to Tier 1 to Tier 4 operators, meeting stringent scalability, reliability, and performance requirements. By disaggregating software from hardware, RBFS helps operators modernize their infrastructure without being locked into proprietary systems. It is deployed on bare-metal switches and transforms them into fully functional and programmable routing platforms. These platforms are capable of implementing a broad set of use cases across broadband access, edge, metro, CGNAT, and peering network segments.

RBFS can be operated in a variety of roles within the network. These include its use as a Broadband Network Gateway (BNG) for subscriber termination, as a peering router in the operator's core, or as a system supporting integrated Carrier-Grade NAT (CGNAT) functionality. This role flexibility makes it suitable for both centralized and distributed deployments in modern telecom architectures.

1.1.1. Modular and Resilient Architecture

RBFS has been built around a modular, microservice-oriented architecture. Each protocol or service runs independently as an isolated process, providing high fault isolation and resilience. This architecture simplifies lifecycle operations such as updates, restarts, and diagnostics. For example, individual components can be restarted without requiring a system-wide reboot or service interruption.

A key element of this design is the distributed datastore known as the Brick Datastore (BDS). This datastore ensures that configuration and operational state are consistently available to all modules. Deterministic behavior is achieved through this shared state, enabling reliable operation and support for advanced functions such as transactional configuration, rollback, and state persistence across restarts.

1.1.2. Automation and Management Interfaces

RBFS integrates with industry-standard management interfaces and protocols, including CLI, NETCONF, RESTCONF/YANG, RESTful APIs, and telemetry streaming. All configuration and operational data are modeled using YANG or OpenAPI, enabling full automation and lifecycle management through external systems. This allows seamless integration into orchestration platforms, provisioning systems, or in-house tooling, supporting both push and pull models.

Support is provided for both synchronous and asynchronous workflows, allowing operators to manage thousands of devices consistently at scale. Built-in support for Prometheus streaming further enhances observability and troubleshooting capabilities. RBFS provides fine-grained access controls and audit mechanisms to support secure operations in multi-team environments.

1.1.3. Comprehensive Feature Set

RBFS supports a wide range of access and aggregation technologies. These include traditional technologies such as PPPoE and L2TPv2 (LAC), as well as IPoE over DHCPv4 and DHCPv6 for modern broadband deployments. The platform offers complete BNG functionality, including DHCP proxy and relay modes, dynamic subscriber session handling, and seamless IP address management.

Advanced features such as hierarchical quality of service (HQoS), multicast replication for IPTV, full CGNAT with high bandwidth scalability, and support for Lawful Interception are included in the base system. The system is also equipped to support dual-stack IPv4 and IPv6 services, ensuring readiness for evolving network requirements.

RBFS also includes mechanisms for stateful redundancy, both Active/Active and Active/Standby, and fast failover, enabling uninterrupted service delivery in large-scale environments. Combined with flexible traffic steering and policy enforcement, RBFS provides a robust foundation for broadband and edge services.

1.1.4. Hardware Flexibility and Ecosystem

RBFS has been validated on a wide range of white-box platforms powered by merchant silicon, including devices from UfiSpace and Edgecore. The operating system runs on OCP-compliant switches, making it compatible with various hardware vendors.

This disaggregation of hardware and software enables operators to optimize both capital and operational expenditures. Devices can be selected based on specific performance, port density, and energy efficiency needs, while the RBFS software stack provides a consistent set of features and interfaces across the network. This approach aligns with the industry's shift toward cloud-native, software-defined infrastructure.

RBFS delivers the flexibility, scalability, and feature richness required to support the transformation of traditional telecom networks into fully disaggregated, automated, and programmable infrastructures.

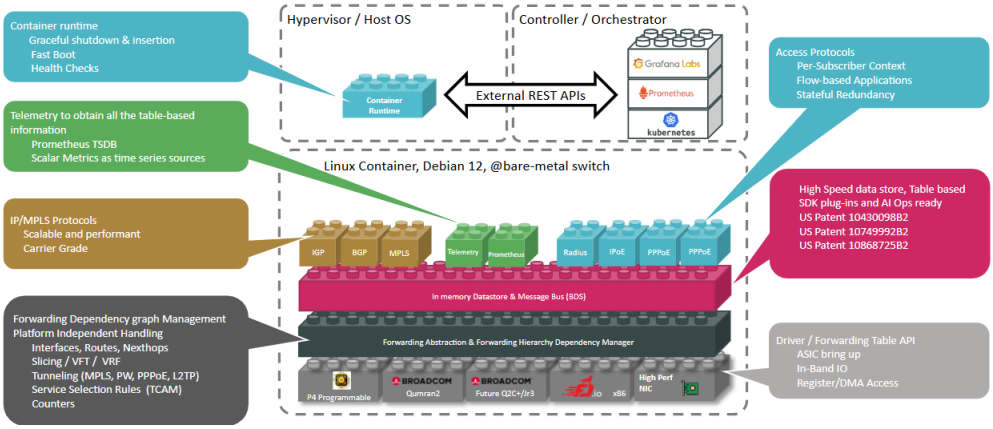

Figure 1. RBFS Overview

1.2. Why RBFS

RBFS has been designed to address the operational, economic, and architectural challenges of modern service provider networks. Its open and disaggregated design enables the rapid introduction of new features and services, while fostering a collaborative and competitive ecosystem of hardware, silicon, and software vendors.

By disaggregating software from hardware, RBFS gives operators the freedom to choose white-box switches based on technical or commercial criteria, avoiding vendor lock-in and reducing hardware dependency. This disaggregated approach significantly lowers both capital and operational expenditures. It supports cloud-native deployment models, making it particularly suitable for environments that require elasticity, programmability, and seamless integration into DevOps pipelines.

RBFS is built on a cloud-native microservices architecture, offering major advantages over traditional monolithic systems. Each application is isolated into its own process, which allows for independent scaling and fault isolation. This architecture provides greater agility and simplifies the deployment of software updates and new features without affecting overall system stability.

Operational efficiency is further enhanced by native support for automation and observability. This accelerates innovation and reduces operational overhead.

With its ability to meet the technical requirements for diverse networks, RBFS represents a future-proof platform that combines performance, openness, and automation in a single solution.

1.3. Architecture and the Key Functional Components

RBFS has been designed based on a microservices architecture to cater a rapidly growing broadband traffic. An RBFS container contains multiple microservices, known as daemons. These microservices are the building blocks of the RBFS ecosystem and they can communicate with each other through a centralized in-memory datastore called Brick Data Store (BDS).

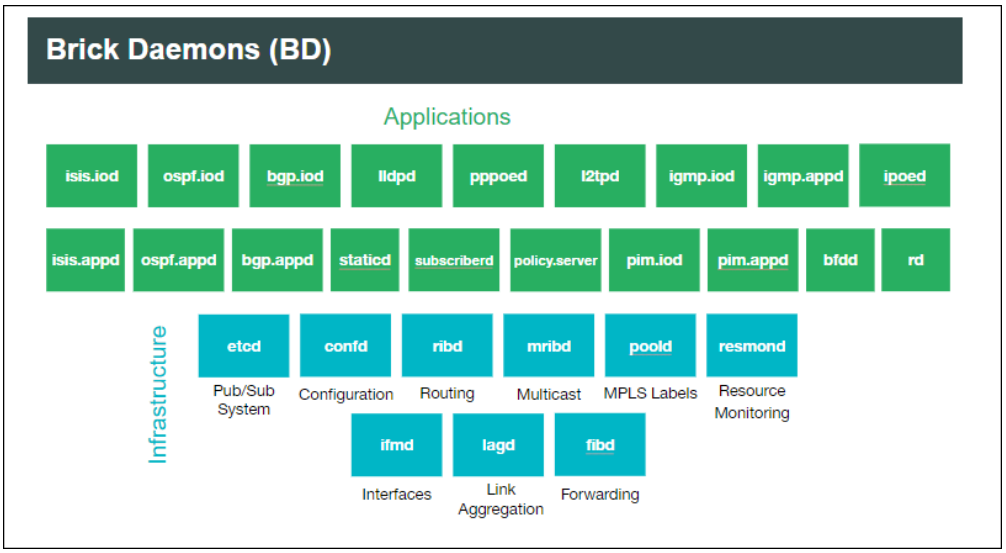

Figure 2. RBFS Microservices

1.3.1. Brick Data Store

RBFS has a schema-driven and in-memory database called BDS (Brick Data Store). As an in-memory data store, BDS relies mainly on the main memory for the storage of data which is contrary to the databases that store data on disks. BDS has architecturally been designed to enable very minimal response time by removing the time to access data stored in disks. BDS acts as a control plane and provides all required data and instructions to the daemons for their functioning.

1.3.2. Brick Microservices

RBFS's microservices architecture enables it to perform various complementary functions and deliver services.

For example, the subscriber microservice (`subscriberd`) manages the current subscriber state and is responsible for authentication, authorization, and accounting. The `ribd` microservice is responsible for route selection, next-hop resolution, tunnel selection and recursion.

There are microservices such as `CtrlD` (Controller) and `ApiGwD` (API Gateway) which are part of the RBFS ecosystem. These daemons sit in the middle (on the Host System) and manage all the communication between the client and backend services running in the container. The API Gateway (`ApiGwD`) microservice provides a single point access to expose services running inside of the RBFS container.

RBFS microservice and other dependencies are packaged as a Debian LXC container. The RBFS container is hosted on the RtBrick Host , an open-source operating system, which can be run on white box switches.

RBFS can perform various roles such as Spine, Leaf, and Multiservice Edge which serve different use-cases. The software images of these various roles contain daemons that are required to serve these roles for their different functions. The RBFS Multiservice Edge software image contains all the RBFS daemons packaged in a container, other roles such as Spine and Leaf include only the daemons which are required to carry out their respective functions. For example, the Spine image includes (in addition to other daemons) the interior gateway protocol daemons such as `isis.appd`, `isis.iod`, `ospf.appd`, and `ospf.iod` which are not required in the Leaf image.

The daemons such as `alertmanager`, `confd`, `etcd`, `fibd`, `hostconfd`, `ifmd` and so on are present in the images of both the Spine and Leaf roles as these daemons are required in both of these roles.

Containerization of Daemons

RBFS daemons and other dependencies are packaged as a Debian LXC container. This containerization is a logical layer that helps to make the applications secure, flexible, and portable by providing isolation. This RBFS container is hosted on the RtBrick Host, Debian-based operating system, which can be run on white box switches.

RBFS can perform various roles such as Spine, Leaf, and Multiservice Edge which have different functions to serve. The software images of these various roles contain daemons that are required to serve these roles for their different functions. Though, the RBFS Multiservice Edge software image contains all the RBFS daemons packaged in a container, other roles such as Spine and Leaf include only the daemons which are required to carry out their respective functions.

Launching Microservices Dynamically

When the RBFS container starts up, it installs different sets of microservices depending on the image role and platform. This is done to minimize resource consumption. In RBFS, the microservices are divided into two categories: base microservices and on-demand microservices. RBFS containers will have all microservices installed according to the platform and image role, but not all will be enabled on bootup. Only the base microservices will be enabled and started on bootup. On-demand microservices will only be started when their respective configurations are configured and will stop once all dependent configurations are deleted.

For instance, when the user configures BGP with the CLI command `set instance <instance> protocol bgp`, the rtbrick-bgp.appd.1 and rtbrick-bgp.iod.1 services will start. And, once the BGP configuration is deleted, "rtbrick-bgp.appd.1" and "rtbrick-bgp.iod.1" will be stopped after 5 minutes (graceful shutdown time).

By default, the following base microservices will be running in the container.

- rtbrick-confd
- rtbrick-etcd
- rtbrick-fibd
- rtbrick-hostconfd
- rtbrick-ifmd
- rtbrick-lldpd
- rtbrick-mribd
- rtbrick-opsd
- rtbrick-poold
- rtbrick-resmond
- rtbrick-resmond-agent
- rtbrick-restconfd
- rtbrick-ribd
- rtbrick-staticd

When you make other RBFS configurations, the required on-demand microservices will be automatically enabled.

1.4. Supported Topologies

RBFS can be deployed in a spine-leaf architecture and can also be deployed standalone in a single switch which consolidates all the features in one switch.

A Multiservice Edge architecture offers all the functionalities of a spine-leaf BNG architecture on a single bare-metal switch.

A spine-leaf architecture is a two-tier network topology that consists of two switching layers — a

spine and a leaf. In this topology, two layers of switches interconnect. The leaf layer consists of access switches that aggregate traffic and connect directly to the spine which is the core network.

The RBFS spine-leaf topology provides better scalability. This topology enables horizontal scaling by adding additional switches to add more capacity to handle increased traffic. This topology is also useful for higher bandwidth.

1.5. Interfaces to Operate and Manage RBFS

RBFS provides a CLI and a rich set of commands that you can use to operate, configure, monitor, and manage the system and its various components. Using the RBFS CLI, you can configure static IPv4, IPv6, MPLS, and multicast routes.

In addition to the CLI, RBFS also offers industry-standard tools and utilities such as RESTCONF/YANG.

RBFS supports REST-based industry-standard tools such as RESTCONF/YANG and Operational State API to enable communication with the software and underlying devices. RESTCONF is a programmatic interface that enables you to programmatically access RBFS devices and manage configurations.

The Operational State API microservice (opsd) provides the operation state of the system. It forms a stable contract between RBFS and network management systems and inspects the operational state of the device to diagnose and troubleshoot problems.

RBFS APIs allow to access and consume RBFS data simply and securely.

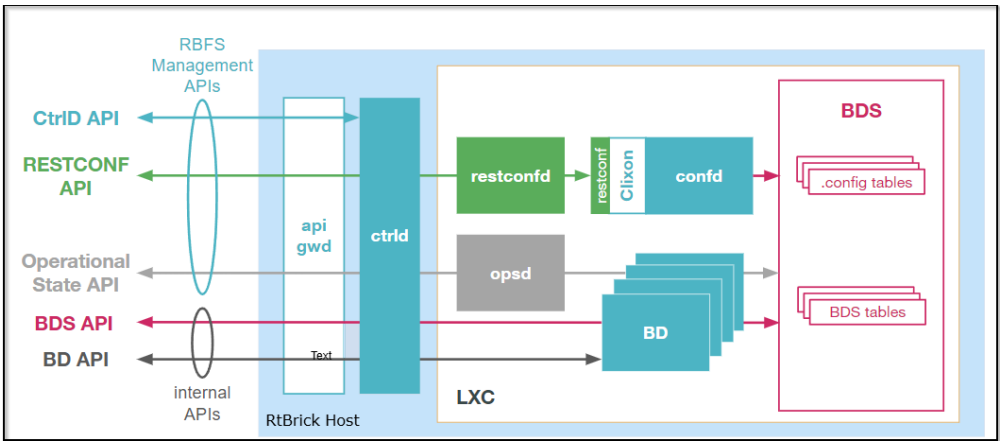

Figure 3. RBFS API Overview

1.6. Features and Components

1.6.1. Routing

RBFS, at its core, is a routing software that supports both IP routing and MPLS routing. In dynamic IP routing, RBFS supports all major routing protocols that include OSPFv2 and IS-IS (interior gateway protocols) and BGP (exterior gateway protocol).

RBFS also supports Protocol Independent Multicast (PIM), a multicast routing protocol that runs

over existing unicast infrastructure. PIM-SSM uses a subset of PIM sparse mode and IGMP to permit a client to receive multicast traffic directly from the source.

BGP

BGP is a standard exterior gateway protocol (EGP) supported by RtBrick. BGP is considered a “Path Vector” routing protocol and maintains a separate routing table based on the shortest Autonomous System (AS) path and various other route attributes.

IS-IS

IS-IS, or Intermediate System to Intermediate System, is an open standard routing protocol. ISO published the standard as a way to route datagrams as part of their OSI stack. IETF later republished the standard, and added IP route support.

OSPFv2/v3

OSPF (Open Shortest Path First) is an Interior Gateway Protocol that distributes routing information within a single Autonomous System (AS) in an IP network. OSPF is a link-state routing protocol that uses link-state information to form a routing table and exchange the routing information with the neighbors.

RtBrick FullStack (RBFS) supports OSPF version 2 (OSPFv2) and OSPF version 3 (OSPFv3), including authentication, LDP-IGP sync, and redistribution policy. RBFS does not support OSPFv3 Virtual Link.

LDP

Label distribution protocol (LDP) is the most commonly used protocol in the MPLS network. It generates and distributes labels and thus helps in MPLS packet switching and forwarding. By using LDP, label-switching routers in an MPLS network can exchange label mapping information to create label-switched paths (LSPs) for switching data packets. RtBrick FullStack (RBFS) supports Dual-stack, which means LDP can exchange FEC-label bindings over either IPv4 or IPv6 networks.

Static Routing

RBFS supports static routing that allows you to configure routes manually.

Segment Routing

RBFS supports segment routing using the IS-IS and OSPF protocols. In segment routing, the source router decides the path (throughout the network) to the destination and encodes the path details in the packet header as an ordered list of instructions. The routers on the path do not take any forwarding decisions but just execute the forwarding instructions.

1.6.2. Layer 2 Services

L2X

Layer 2 Cross-Connect (L2X) is a data plane feature that connects two physical ports (IFPs) using Layer 2 switching. L2X can switch the traffic between two IFPs to provide the trunk service for an

Ethernet switch.

EVPN-VPWS

Ethernet Virtual Private Network (EVPN) is a Layer 2 internetworking technology similar to BGP/MPLS IP VPN. EVPN uses extended BGP reachability information and advertisements between different Layer 2 networks at various sites in the control plane.

The EVPN Virtual Private Wire Service (VPWS) is a point-to-point (P2P) service that is built on the EVPN service architecture. EVPN-VPWS uses MPLS tunnels to traverse the backbone network. It offers a Layer 2 packet forwarding mode that connects access circuits (ACs) as per the specifications of RFC 8214.

BGP-signaled L2VPN

The BGP-signaled L2VPN uses BGP for signaling and auto-discovery to establish multipoint Layer 2 VPN over the MPLS backbone network. The remote cross-connect is a point-to-point (P2P) service that connects two locations using the MPLS core network and MP-BGP. The remote cross-connect uses MPLS tunnels to traverse the backbone network. It offers a Layer 2 packet forwarding mode that connects access circuits (ACs). The RBFS implementation of BGP-signaled L2VPN is in accordance with RFC-6624 which supports L2VPN using BGP for auto-discovery and Signaling.

1.6.3. Multicast

IGMP

Internet Group Management (IGMP) protocol allows a host to advertise its multicast group membership to neighboring switches and routers. IGMP is a standard protocol used by the TCP/IP protocol suite to achieve dynamic multicasting.

PIM

PIM SSM builds shortest-path trees (SPTs) rooted at the source immediately because in SSM, the router closest to the interested receiver host is informed of the unicast IP address of the source for the multicast traffic. That is, PIM SSM bypasses the RP connection stage through shared distribution trees, as in PIM sparse mode, and goes directly to the source-based distribution tree.

Multicast VPN

The Multicast VPN (MVPN) feature provides the ability to support multicast over a Layer 3 VPN. Multicast allows the efficient distribution of information between a single multicast source and multiple receivers. IP multicast is used to stream video, voice, and data to an MPLS VPN network core. The RBFS MVPN implementation is based on RFC 6513 “Multicast in MPLS/BGP IP VPNs” and RFC 6514 “BGP Encodings and Procedures for Multicast in MPLS/BGP IP VPNs”.

Routing Policy

RBFS routing policies allow to control and modify the behavior of routing protocols such as IS-IS, OSPF, and BGP. RBFS has a generic routing policy framework that serves multiple purposes and applications. In RBFS, the routing policy implementation is performed by four major components:

Policy Repository, Command Processing Module, Policy Server, and Policy Client.

1.6.4. Access and Subscriber Management

RtBrick's modular and scalable subscriber management offers the next-generation access infrastructure (ng-access) that supports protocols such as PPPoE, IPoE, L2TPv2, DHCPv4 and DHCPv6 and RADIUS. It provides subscriber authentication, access, service creation, activation, and deactivation. It collects accounting statistics for the subscriber sessions. RBFS enables you to address the challenges such as interoperability with numerous client devices from various vendors which requires a well-implemented and industry-proven access protocol stack, including support for all relevant RFCs. RBFS subscriber management infrastructure provides the next generation of internet access protocols designed for carrier-grade services.

Support for PPPoE, IPoE, and L2TPv2

RBFS supports subscriber session management protocols such as Point-to-Point Protocol over Ethernet (PPPoE), Layer Two Tunneling Protocol (L2TPv2), and IP over Ethernet (IPoE) to deliver network access services to broadband subscribers.

PPPoE establishes a PPP connection over the ethernet. In RBFS, the PPPoE microservice (`pppoed`) manages PPPoE and PPP sessions.

IP-over-Ethernet (IPoE) is an alternative to PPPoE to deliver network access services to broadband subscribers. IPoE does not require client dial-in software and is easy to use when accessing the network. In RBFS, the IPoE microservice (`ipoed`) manages IPoE services using DHCPv4 and DHCPv6.

The L2TPv2 microservice (`l2tpd`) is used for the L2TPv2 tunnel and session handling. L2TP is a Layer-3 tunneling protocol that initiates a tunnel between an L2TP access concentrator (LAC) and an L2TP network server (LNS). This enables Point-to-Point Protocol (PPP) link layer to be encapsulated and transferred across the internet.

Accounting

RBFS accounting is the process of tracking subscriber activities and network usage in a subscriber session for auditing and billing. Accounting tracks information such as subscriber identity, the number of packets and bytes transferred from and to the network, start and stop times of the sessions and so on. The accounting keeps track of resources used by the subscriber during the sessions. This includes the session time called time accounting and the number of packets and bytes transmitted during the session called volume accounting. In RBFS, accounting can be performed based on classes or types of services such as video, VoIP, and data.

Support for Lawful Interception

RBFS supports Lawful Interception (LI) to allow legal authorities to obtain communications network data for analysis or evidence. LI is a technique of intercepting certain user data streams tunneling the intercepted traffic to a mediation device with the data and only the users with appropriate credentials can access the intercepted data.

HTTP Redirect Service

RBFS HTTP Redirect service allows network service providers to intercept and redirect HTTP request traffic from subscribers to a designated captive portal instead of the original destination. This powerful service has a multitude of use cases, ranging from subscriber re-authentication to enforcing acceptance of network usage policies. It allows network service providers to re-authenticate subscribers when necessary and ensure that users explicitly accept network usage policies before accessing services. By implementing the RBFS HTTP Redirect Service, network service providers can efficiently manage user access and enforce compliance with network regulations and policies, ultimately enhancing the overall security and user experience within their network environment.

1.6.5. RBFS (Hierarchical) Quality of Service

RBFS Quality of Service (QoS) is a method of prioritizing network traffic for mission-critical applications and high-priority network services such as voice and video. It provides control over a variety of traffic types and ensures that critical data traffic gets sufficient network resources such as bandwidth.

RBFS can perform priority forwarding of data packets throughout the network. For this preferential forwarding, it identifies and classifies the network traffic. So that the critical network packets get sufficient resources. RBFS QoS ensures the required level of service and provides cost benefits to network providers by enabling them to use network resources efficiently.

RBFS also supports Hierarchical Quality of Service (HQoS), a mechanism that allows you to specify Quality of Service (QoS) behavior for different traffic classes. QoS allows classifying services such as voice and video, but using HQoS, you can apply QoS policies to different users, VLANs, logical interfaces, and so on. RBFS employs HQoS by using the mechanisms such as classifier, queuing, scheduler, policer, shaper, and remarking. HQoS provides a higher degree of granularity in traffic management.

1.6.6. RBFS Carrier-Grade Network Address Translation

RBFS is multi-service edge routing software with which you can deliver both CGNAT and BNG functionalities on a single open switch to reduce costs and increase efficiency.

The RBFS CGNAT or NAT444 solution supports Network Address Port Translation (NAPT), which has the potential to conserve IPv4 addresses for service providers. NAPT is an effective method for allowing multiple devices to connect to the Internet using a single public IPv4 address.

The solution can address the IPv4 depletion challenge of service providers. Using the RBFS CGNAT, service providers can serve a large number of subscribers using a limited number of public IPv4 addresses.

RBFS CGNAT solution has some unique characteristics. Both BNG functionalities and CGNAT functionalities can coexist in a single RBFS device. RBFS CGNAT implements NAT in the chipset that allows for the delivery of CGNAT functionality in-line, fully integrated into the packet processing pipeline alongside other functions in the data plane itself, without requiring any additional chipset resources.

RBFS CGNAT supports deterministic NAT mode of address translation, which provides a consistent mapping of private IPv4 addresses with public IPv4 addresses and port ranges. This mode ensures a one-to-one mapping of private IPv4 addresses with public IPv4 addresses, allowing you to specify the private address and its matching public address and port range. The given private IPv4 address is always translated to the same public address.

1.6.7. Ethernet VPN - Virtual Private Wire Service

RBFS Ethernet VPN - Virtual Private Wire Service (EVPN-VPWS) technology provides point-to-point Layer 2 services over an IP or MPLS network. It is based on the EVPN (Ethernet VPN) technology, which extends the BGP (Border Gateway Protocol) to handle MAC addresses and Ethernet segments in addition to IP prefixes.

EVPN-VPWS allows service providers to offer Layer 2 services with better scalability, flexibility, and ease of operation compared to traditional Layer 2 technologies like VPLS (Virtual Private LAN Service). It uses BGP as the control plane protocol to distribute MAC reachability information across the network, enabling efficient MAC learning and forwarding.

1.6.8. RBFS Redundancy

RBFS supports deployment in redundancy mode that protects from link and node failures. Node and link outages that may occur on an RBFS access network can bring down the subscriber services. RBFS Redundancy helps to minimize the impact of these events and to reduce interruptions and downtime by providing a resilient system.

RBFS Redundancy protects subscriber services from various software and hardware outages. It provides mechanisms to enhance network resiliency that enables subscriber workloads to remain functional by ensuring a reliable switchover in the event of a node or link outage. With RBFS Redundancy, if one node goes down, another node can automatically take over the services.

RBFS Redundancy protects subscriber groups using an active standby node cluster model. RBFS Redundancy architecture consists of an active-standby node cluster and one node is active that runs workloads at a time. The peer node, which is identical to the first node, mirrors the concurrent subscriber state data from the peer and takes over workloads in the event of a node or link failure.

1.6.9. Zero Touch Provisioning

By leveraging the Zero Touch Provisioning (ZTP) feature, you can automate many of the RBFS deployment and setup tasks. ZTP allows you to set up and configure the platforms automatically by eliminating the repetitive manual tasks in a large-scale environment. This feature significantly reduces human touch points and errors prone by manual interventions and makes the deployment easier.

1.6.10. Scalability in RBFS

RBFS allows horizontal scaling to enhance system capacity. You can add additional switches to the spine and leaf layers to enhance capacity to handle increased subscriber traffic.

RBFS offers subscriber management capacity in a scale-out architecture called the Point-of-

Deployment (PoD), also known as a SEBA PoD (SDN-enabled PoD). A large-scale PoD consists of access leaf routers aggregated by a layer of spine routers in an auto-provisioned CLOS topology. The access leaf routers provide subscriber management functionality. For even greater scalability, a layer of border leaf routers can be added to the core of the network provider network to provide more connectivity.

The leaf routers can be scaled out horizontally to increase the number of subscribers supported on the PoD, providing a pay-as-you-grow model. PPPoE subscribers can be terminated on the access leaf routers or tunneled to an LNS over L2TPv2. L2 Cross Connect (L2X) allows subscriber traffic to be tunneled out of the PoD at Layer 2, providing connectivity.

1.6.11. Security in RBFS

In RBFS, security is integrated into the foundation of the network. RBFS implements several techniques and methods to safeguard the entire network infrastructure. RBFS has a comprehensive set of security capabilities that deploy multiple security controls to protect different areas of the system and network.

Security features for RBFS Control Plane

RBFS Control Plane security feature enables filtering and rate-limiting the traffic transmitted from the forwarding plane to the control plane. RBFS uses Access Control Lists (ACLs) and policers to secure the router's control plane.

All routing protocols, management protocols, and service protocols run in the control plane. The output of these protocols results in databases such as routing tables, MAC tables, ARP tables, and so on, which eventually get programmed in the forwarding plane.

ACLs are the building blocks of control-plane security. RBFS employs fundamental mechanisms - Protocol ACLs and Route Lookup - for redirecting control plane traffic to the CPU and policers for controlling CP traffic to the CPU.

All routing protocols (BGP, OSPF, and ISIS), Management Protocols (SSH, RESTCONF/YANG, and so on), Service Protocols (RADIUS, NTP, and TACACS+), and Access Protocols (PPPoE, DHCP, L2TP, and PPP) automatically create Access Control Lists (ACLs) required to punt the protocol traffic to the CPU Control Plane.

The RBFS Control Plane Security feature adds policers to all protocol ACLs. This feature creates a set of default policers and applies them to the protocol ACLs to secure the control plane from DDoS attacks.

Security features for RBFS Management Plane

RBFS provides the capability to restrict access to the management plane only to authenticated and authorized entities. The authentication identifies the entity and the authorization validates if the entity is allowed to execute the action.

RBFS supports the security protocol, TACACS (Terminal Access Controller Access Control System). RBFS provides a Pluggable Authentication Module (PAM) that enables it to work with TACACS for centralized authentication for users who try to access a router.

For management plane security, RBFS implements token-based authentication that provides access to the management plane through APIs only to the authenticated entities.

RBFS uses JSON web token, an open standard token, that defines a compact and self-contained way for securely transmitting information between parties as a JSON object. The ApiGwD microservice validates the access token against a JSON web key set (JKWS).

1.6.12. Logging and Observability in RBFS

RBFS logging is the process of writing log messages during the execution of an event. Logging provides reports about the events in the entire RBFS ecosystem at different functional areas. You can configure logging based on the different severity levels available. RBFS also allows you to send logs to third-party log management servers such as Graylog where you can view and analyze the real-time data. It provides you the ability to trace out the errors of the applications in real-time.

Operational state visibility is crucial for troubleshooting, testing, monitoring, and capacity management. To enable operational visibility, it is required to collect router metrics periodically. RBFS allows the ingestion of time-series data allows to send operational queries.

RBFS uses Prometheus, an open-source system monitoring and alerting tool, for monitoring and metric collection. Prometheus collects time-stamped data for events, network data, application performance, and so on. The tool allows analyzing metrics with the `PromQL` query language. Additionally, RBFS provides an optional alert management tool. You can use both of these tools together with its own services to integrate them into the RBFS ecosystem.

Observability Using SNMP

RBFS SNMP (Simple Network Management Protocol) provides a network monitoring mechanism that collects state information from various network devices and components. With SNMP, you can monitor interfaces, CPU usage, temperature of the device, bandwidth usage, and so on. For example, if an interface goes down on one of the devices, SNMP can quickly alert this. The RBFS SNMP implementation allows retrieving system state information using the Protocol Data Unit (PDU) from various network components.

SNMP allows performing various operations that include GET for retrieving data, SET for modifying data, TRAP for notifying an event and so on. These operations provide management access to the MIB hierarchy. RBFS supports the SNMP version 2c and SNMP version 3.

Resource Monitoring

Monitoring the device and its various components is very crucial to analyze the health of devices. RBFS provides resource monitoring capabilities to keep track of various components of the devices. RBFS has a dedicated microservice called `resmond` to discover and monitor the device resources. With RBFS Resource Monitoring, you can continuously observe the health of the system resources such as CPU, Memory, Processes, Disks, Sensor, and Optics.

1.6.13. RBFS Software Installation

RBFS software is available at RtBrick Image Store (https://releases.rtbrick.com/) where you can

download the latest version. For more information on RBFS software installation, see RBFS Installation.

2. Platform

2.1. Platform Overview

RBFS allows customers to select their preferred hardware platforms. This document provides information about RBFS-supported hardware platforms and the features available on each platform. It also includes information on firmware versions, the feature support matrix, and resource limits. This guide helps you understand the various supported platforms and their capabilities and help you evaluate and choose the right platform for your needs.

The RBFS Software runs as an LXC container on the RtBrick Host system, deployed on bare-metal switches. The switch can function independently as standalone unit leveraging all functionalities into a single platform or can be combined into a leaf-spine architecture for scalable deployments. The software supports Zero-Touch Provisioning (ZTP) installation and provides REST-based APIs for configurations and operations.

The guide is organized into the following sections:

- **Platform Overview**: A high-level summary of the platforms.
- **Platform Hardware Information**: Detailed specifications of the hardware, including CPU, ASIC, Form Factors, memory, storage, and network interfaces.
- **Firmware Versions**: Information on supported firmware versions and their compatibility with RBFS.
- **Feature Support Matrix**: Information about RBFS features supported on various platforms and for various roles.
- **Resource Limits/Feature Support**: Details on resource allocation, such as maximum routes and interfaces.

The following image shows a high-level overview of the platform architecture.

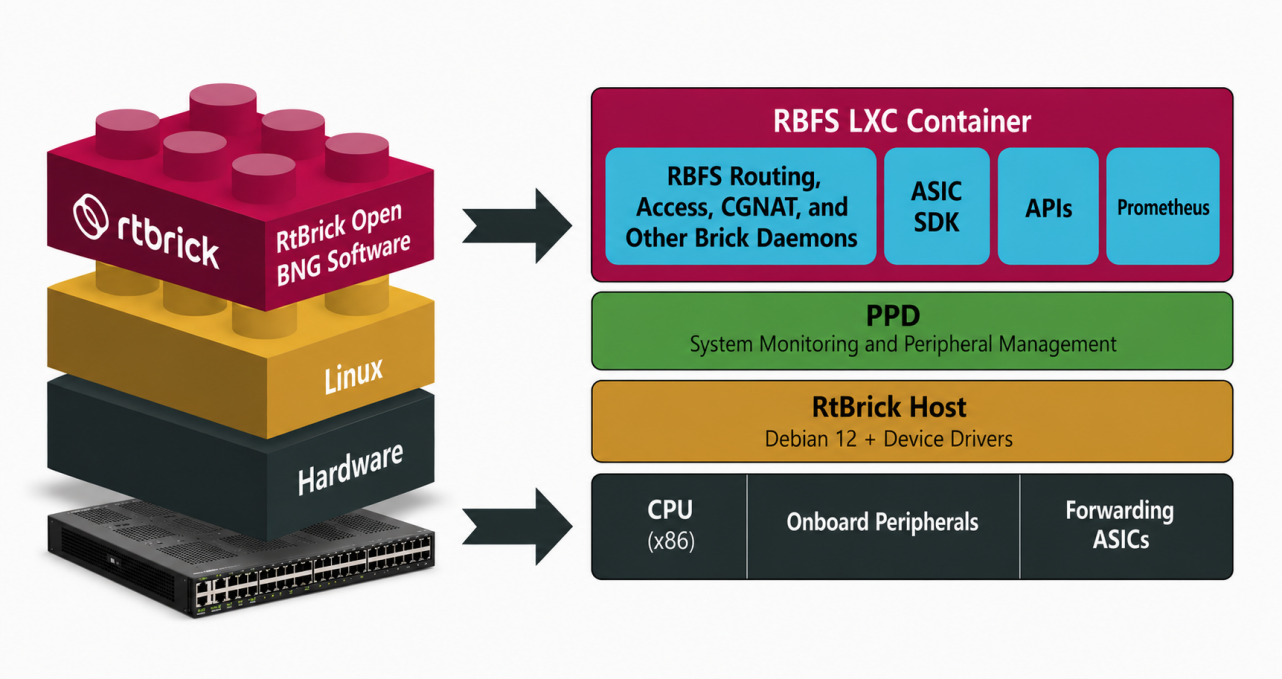

Figure 4. Platform Overview

Platform hardware consists of forwarding ASICs and an RtBrick Host operating system. A RBFS container that resides on top of this software includes all necessary packages to deliver access and routing protocols.

2.1.1. Supported Platforms

RtBrick's software has been validated on the following hardware platforms.

Hardware Platform	Switch ASIC	Role
UfiSpace S9510-28DC	Q2A	Multiservice Edge
Edgecore CSR440 (AS7535-28XB)	Q2A	Multiservice Edge
UfiSpace S9600-72XC	Q2C	Access Leaf, Multiservice Edge
UfiSpace S9600-102XC	Q2C	Access Leaf, Multiservice Edge
Edgecore AGR420 (AS7946-74XKSB)	Q2C	Access Leaf, Multiservice Edge
UfiSpace S9600-32X	Q2C	Spine

Hardware Platform	Switch ASIC	Role
Edgecore AGR400 (AS7946-30XB)	Q2C	Spine
UfiSpace S9610-46DX	Q2C+	Multiservice Edge
UfiSpace S9500-22XST	QAX	L2 Wholesale (L2BSA)

For a list of features and sub-features supported by each platform, see Feature Support Matrix.

2.1.2. End-of-Life Policy

RtBrick periodically introduces software support for new hardware platforms and use cases. Likewise, support for older software is discontinued to ensure that RtBrick can provide appropriate attention to software critical to drive business functions. The End-of-Life Policy page details the platforms that are no longer supported or have limited support from RtBrick.

2.1.3. Guidelines and Limitations

QAX-based Platforms

- An additional restriction applies to ports belonging to a port group on QAX-based platforms. For more information, see section Guidelines and Limitations of the *Interfaces User Guide*.
- MPLS forwarding is not supported on double-tagged interfaces. It is supported only on untagged and single-tagged interfaces.

2.1.4. Brick Daemon (BD)

RBFS runs multiple Brick Daemons (BD). Every application that runs within RBFS is fundamentally a brick daemon. For example, forwarding daemon (fibd), configuration daemon (confd), BGP (bgp.iod or bgp.appd), or interface management daemon (ifmd).

Brick Daemon (BD) Restartability

If a brick daemon fails, RBFS will restart it automatically. All microservices can restart automatically for an unlimited number of times. It improves system resilience in the event of recoverable failures. If the automatic restart does not succeed, you can use the Ubuntu system control to start a daemon.

For more information about troubleshooting the Brick Daemons, see section "2.2. Brick Daemons" of the *RBFS NOC Troubleshooting Guide*.

Limited Core Files to Save Disk Space

RBFS can prevent disk space exhaustion caused by repeated process crashes. Each process is allowed to retain up to three core files. When a new core file is generated, the oldest file will be

automatically deleted. It improves disk space management while retaining recent crash data for debugging.

2.1.5. Setting Up System Parameters

You can configure basic host system parameters such as 'element name' and 'pod name' using the `set system host` command.

Syntax:

set system host <attribute> <value>

Attribute	Description
`element-name <element-name>`	Specify the name of the element (container). A pod can contain a group of elements.
`pod-name <pod-name>`	Specifies the name of the Pod. Pod stands for point (zone) of deployment.
`heartbeat-interval <heartbeat-interval>`	Specify the interval in seconds for the heartbeat signal that the system uses to monitor the health of the host.
`log-alias <name> endpoint <address> level <emergency|alert|critical|error|warning|notice|info|debug|none>`	Specify the log alias, endpoint address, and log level for system logging. The log level determines the severity of messages that are logged, with options ranging from 'emergency' (most severe) to 'debug' (least severe).
`log-alias <name> endpoint <address> network <http|udp|tcp>`	Specify the network protocol (HTTP, UDP, or TCP) used for transmitting log messages to the specified endpoint.
`log-alias <name> endpoint <address> queue-size <0-500>`	Specify the log alias, endpoint address, and queue size for system logging. The queue size determines the maximum number of log messages that can be stored in the queue.
`log-alias <name> endpoint <address> type <gelf|syslog>`	Specify the log alias, endpoint address, and log type for system logging. The log type determines the format of the log messages.
`nameserver <nameserver>`	Specify the IP address of the DNS server. It is allowed to configure a maximum of three servers.
`role`	Specify the role of the element. Roles include Spine, Access Leaf, Border Leaf, and so on.
`log-alias <name> endpoint <address> allow <regex-pattern>`	Specify the log alias, endpoint address, and regex pattern to allow specific log messages that match the pattern to be logged.

The `hostname` is defined in the DHCP server. The maximum length of the `hostname` is restricted to 64 characters.

Example: System Parameters Configuration

```
supervisor@rtbrick>LEAF01: op> show config system host
{
  "rtbrick-config:host": {
    "element-name": "ufi10.q2c.u9.r4.nbg.rtbrick.net",
    "pod-name": "nbg4"
  }
}
```

2.1.6. CPU Watchdog Timer Utility for Hardware Platforms

The CPU watchdog timer utility is located in BMC and helps to detect any CPU failure. It also enables the CPU to recover from faults. By default, Watchdog Timer functionality is enabled, and it does not require any configuration from users. However, you can configure it to change the default settings.

Enable CPU Watchdog Timer in Hardware

Use the following command to enable watchdog timer on the hardware.

Syntax:

set system platform-management watchdog CPU <attribute> <value>

Attribute	Description
`action`	Specifies the possible timeout actions: • hard-reset: A reset will take place based on the configured settings. • no-action: No action will be taken. • power-cycle: The watchdog timer will power cycle the device. • shutdown: The device will shut down per the configured setting. Default value: power-cycle.
`interval`	Specifies the watchdog timer interval in seconds. Default value: 1800 seconds.

Example: Enable CPU Watchdog Timer

```
supervisor@rtbrick>LEAF01: op> show config system platform-management watchdog
{
    "rtbrick-config:watchdog": [
```

```
      {
        "type": "CPU",
        "action": "hard-reset",
        "interval": 3600
      }
    ]
  }
```

You can use the `ipmitool` utility to view the status of the CPU watchdog timer.

Log into the RtBrick Host and enter the command as shown below to validate CPU watchdog timer functionality.

```
supervisor@onl>rtbrick:~ $ sudo ipmitool mc watchdog get
Watchdog Timer Use:     OS Load (0x43)
Watchdog Timer Is:      Started/Running
Watchdog Timer Actions: Power Cycle (0x03)
Pre-timeout interval:   0 seconds
Timer Expiration Flags: 0x00
Initial Countdown:      1800 sec
Present Countdown:      1795 sec
```

2.1.7. Displaying Platform Information

To display platform information, use the `show platform` command, as shown in the example below.

```
supervisor@rtbrick>LEAF01: op> show platform
x86_64-ufispace_s9600_72xc-r0
  Role                  : multiservice-edge
  Platform              : q2c(BCM88820_A1)
  External Processor    : OP2(model: X register-value: 0x69A)
  Vendor                : Ufi Space
  Manufacturer          : Ufi Space
  Manufacture date      : 06/28/2021 10:51:29
  MAC address           : E8:C5:7A:8F:78:0D
  Part number           : S9600-72XC-RB6B
  Serial number         : WJ91B67T00009B3
  Product name          : S9600-72XC-R
  ONIE version          : 2022.02v04
  Label revision        : N/A
  Diag version          : 0.1.4
  Country code          : CN
  Device version        : 1
```

- Information about external processors is displayed only for Q2C platforms and non-spine image roles. "N/A" displayed otherwise.
- When using virtual platforms, the "show platform" CLI command does not

provide any output.

2.1.8. Displaying RBFS Version Information

To display RBFS version information, use the `show version` command, as shown in the example below.

```
supervisor@rtbrick>LEAF01: op> show version
UUID        : 4e83e9a4-eb65-4ab0-a756-3ae3536dd6ad
Version     : 25.4.0-g6daily.20251126013758+Bdevelopment.C0313b7f9
Role        : multiservice-edge
Platform    : q2c
Format      : lxd
Build date  : 2025-11-26 01:37:58 UTC
```

To display detailed version information for RBFS along with library versions, use the `show version detail` command, as shown in the example below.

```
supervisor@rtbrick>LEAF01: op> show version detail
UUID        : 4e83e9a4-eb65-4ab0-a756-3ae3536dd6ad
Version     : 25.4.0-g6daily.20251126013758+Bdevelopment.C0313b7f9
Role        : multiservice-edge
Platform    : q2c
Format      : lxd
Build date  : 2025-11-26 01:37:58 UTC
Component                   Version                                                 Timestamp                Branch
alertmanager                ....0-g6daily.20251112122211+Bdevelopment.Cfd733666     2025-11-11 10:41:02      development
cligen                      0.1.0-g6daily.20251105111321+Bdevelopment.Cd8964728     2025-11-05 10:12:50      development
clixon                      4.3.1-g6daily.20251125140131+Bdevelopment.Cfc95084c     2025-11-13 03:40:34      development
ems-service-event           0.2.0-g6daily.20251104173513+Bdevelopment.Cd923496f     2025-10-28 09:33:01      development
etcd                        ....0-g6daily.20251105113559+Bdevelopment.C8987db4e     2025-10-28 09:32:14      development
fwd-plugin-bcm-q2c-s96...   4.2.0-g6daily.20251126010001+Bdevelopment.Cca388617     2025-11-26 00:40:28      development
hostconfd                   ....0-g6daily.20251121153022+Bdevelopment.C4b49f4ba     2025-11-21 08:26:47      development
hostnetconfd                0.7.0-g6daily.20251119153025+Bdevelopment.C0a756d06     2025-11-19 08:13:05      development
json-builder                0.1.0-g6daily.20251105112151+Bdevelopment.C7bf78ef6     2025-10-28 09:26:24      development
json-parser                 1.1.0-g6daily.20251104173526+Bdevelopment.C95257c44     2025-10-28 09:25:00      development
libbgp                      1.2.0-g6daily.20251126005928+Bdevelopment.Cb86c1199     2025-11-21 11:52:25      development
libcjson                    1.0.0-g6daily.20251104173453+Bdevelopment.C1bfaae2f     2025-10-28 09:24:36      development
libconfd                    1.1.1-g6daily.20251125140948+Bdevelopment.C6f603a5b     2025-11-04 12:37:53      development
libdict                     1.0.1-g6daily.20251104173534+Bdevelopment.C3698deb7     2025-10-28 09:28:14      development
libegrep                    1.1.0-g6daily.20251104173611+Bdevelopment.Cd8731a66     2025-10-28 09:28:29      development
libforwarding               4.2.0-g6daily.20251126005549+Bdevelopment.Cca388617     2025-11-26 00:40:28      development
libh2o                      2.2.6-g6daily.20251105112618+Bdevelopment.Ccabf806c     2025-10-28 09:28:27      development
libigmp                     1.1.0-g6daily.20251126005259+Bdevelopment.C63aa1a88     2025-10-28 09:24:52      development
libisis                     1.2.0-g6daily.20251126005938+Bdevelopment.Cae8678be     2025-11-26 00:38:37      development
liblacp                     0.2.0-g6daily.20251126010938+Bdevelopment.C6b68d457     2025-11-04 12:37:48      development
libldp                      0.3.0-g6daily.20251126005023+Bdevelopment.C01e28f15     2025-11-05 06:11:14      development
liblldp                     1.1.1-g6daily.20251126010933+Bdevelopment.C81ae1f31     2025-10-28 09:24:48      development
liblwip                     1.2.0-g6daily.20251105112452+Bdevelopment.C7c22f157     2025-11-04 08:51:45      development
libnat                      1.4.0-g6daily.20251126005258+Bdevelopment.C8f3e30ca     2025-11-05 06:15:54      development
libng-access                1.2.0-g6daily.20251126005302+Bdevelopment.C470442a6     2025-11-19 17:15:01      development
<...>
```

2.1.9. Configuring Platform Profiles

Network operators can determine ASIC scale profiles and features to meet their specific business requirements. Currently, the platform profile configuration is supported on the Multiservice Edge image on the Q2C and Q2A platforms. The profiles can be viewed using the `show platform-profile` command.

Guidelines & Limitations

- The system only allows the configuration of the profiles and features it supports.
- This system allows to configure any one of the supported profiles.
- You can configure multiple features for one profile.
- You can make changes to the features, such as removing or modifying them.
- A system reboot is required for the changes to take effect.

Platform Profile Support

Platform	Supported Profile	Supported Features	Default
Q2C Multiservice Edge	`1q`, `4q`, `nat_standalone`, `nat_1q`, `nat_4q`	IPoE N:1, sFlow, and so on.	4q
Q2A Multiservice Edge	`1q`, `4q`, `nat_standalone`, `nat_1q`, `nat_4q`	IPoE N:1, sFlow, and so on.	4q (ipoe-n-1)

To configure profile for a specific platform, use the command below.

Syntax:

set system platform profile <profile_name>

Attribute	Description
`<profile-name>`	Specifies the profile that you want to activate. Supported platform profiles include `1q`, `4q`, `nat_1q`, `nat_standalone`, and `nat_4q`. The new platform profile will be activated only after a system reboot
`feature <feature>`	Specifies the feature that enabled along with the profile.
`<profile_name>`	Specifies the profile that you want to activate. Supported platform profiles include `1q`, `4q`, `nat_1q`, `nat_standalone`, and `nat_4q`. The new platform profile will be activated only after a system reboot. If no profile is configured, the system defaults to the profile `4q`.

Attribute	Description
`<feature>`	Specifies the feature that is enabled along with the profile. To enable support for 400G transceivers, you must specify `400Gx1` (one 400G port mode) or `400Gx2` (two 400G ports mode) as the feature name.
`redundancy-mode`	Choose the desired redundancy mode: `standby-forwarding` or `standby-non-forwarding`.
`force-restart-fibd true`	When this option is enabled, and the configuration is pushed through ZTP, the FIBD process will restart, which will also trigger hardware initialization. This ensures that changes to the platform profile configuration take effect deterministically in RBFS.

Example: Configuring 1q platform profile

```
set system platform
set system platform profile 1q
```

```
supervisor@rtbrick.net: cfg> show config  system platform
{
  "rtbrick-config:platform": {
    "profile": [
      {
        "profile_name": "1q"
      }
    ]
  }
}
```

Example: Enabling the feature ipoe-n-1 for the profile nat_1q

```
supervisor@switch: cfg> set system platform profile nat_1q feature ipoe-n-1
```

```
"rtbrick-config:system": {
      "platform": {
        "profile": [
          {
            "profile_name": "nat_1q"
          }
        ]
      }
    }
```

```
"rtbrick-config:system": {
      "platform": {
        "profile": [
          {
            "profile_name": "nat_1q",
            "feature": [
              "ipoe-n-1"
              ]
          }
        ]
      }
    }
```

Example: Enabling the redundancy mode for the profile nat_1q

```
supervisor@switch: cfg>set system platform profile nat_1q ipoe-mode standby-non-
forwarding
```

```
platform": {
        "profile": [
          {
            "profile_name": "nat_1q",
            "feature": [
              "ipoe-n-1"
              ],
            "ipoe-mode": "standby-non-forwarding"
          }
        ]
      }
```

Example: Enabling ZTP-compatible Profile

```
supervisor@rtbrick.net: cfg> set system platform profile 1q force-restart-fibd true
supervisor@rtbrick.net: cfg> commit
Warning: FIBD restart is triggered for platform-profile configuration to take effect
```

To view the profiles configured for a platform after reboot, use the show platform-profile command as shown in the example below

Example: Viewing Platform Profile on the Q2A Platform

```
supervisor@rtbrick>LEAF01: op>show platform-profile
Platform-profile: 4q
  Role: multiservice-edge
  MDB Profile: custom_q2a_scale_4q
```

```
    Counter Profile: multiservice_edge
  Features: -|ipoe-n-1|-|-
```

```
supervisor@rtbrick>LEAF01: op>show platform-profile
Platform-profile: nat_4q
  Address Translation Service: True
  Role: multiservice-edge
  MDB Profile: custom_q2a_scale_nat
    Counter Profile: multiservice_edge_nat_extend
  Features: -|ipoe-n-1|-|sflow
```

Example: Viewing Platform Profile on the Q2C Platform

```
supervisor@rtbrick>LEAF01: op> show platform-profile
Platform-profile: nat_4q
  External Processor Variant: OP2_M
  Address Translation Service: True
  Role: multiservice-edge
  MDB Profile: custom_rtb_multiservice_edge_nat
    Counter Profile: multiservice_edge_nat_extend
    Forwarding Routes on External Processor: False
    Ingress Accounting is External: False
    Egress Accounting is External: True
```

The following example configures the platform profile named `4q` to enable the `400Gx1` feature, which activates support for one 400G transceiver on the system.

```
set system platform profile 4q feature 400Gx1
```

```
"rtbrick-config:system": {
      "platform": {
        "profile": [
          {
            "profile_name": "4q",
            "feature": [
              "400Gx1"
              ]
          }
        ]
      }
    }
```

For more information about the 400G ZR+ Optics, see the Support for 400G ZR+ Optics on UfiSpace S9510-28DC Platform section.

Port Configuration for 400G Optics

The table below provides a summary of the ports NIF for 400G ZR+ optics on the UfiSpace S9510-28DC platform in both modes (`mode_1_400G` and `mode_2_400G`).

400G ZR+ Optics Port Summary

Mode	Resource	Ports	Port Type	Speed	Bandwidth
mode_1_400G	400G	1	NIF	400	400
	100G	3	NIF	100	300
	25G	4	NIF	25	100
	10G	20	NIF	10	200
	OAM	1	Internal	10	10
	OLP	1	Internal	10	10
	Eventor	1	Internal	10	10
	ERP	1	Internal	10	10
	KR Port	4	Internal	10	40
	SAT Interface	1	Internal	100	100
mode_2_400G	400G	2	NIF	400	800
	100G	2	NIF	100	200
	OAM	1	Internal	10	10
	OLP	1	Internal	10	10
	Eventor	1	Internal	10	10
	ERP	1	Internal	10	10
	KR Port	4	Internal	10	40
	SAT Interface	1	Internal	100	100

The `mode_1_400G` mode supports one 400G port and all twenty-eight ports can be used, whereas in the `mode_2_400G` mode, two 400G ports are supported and only four ports can be used.

The `show interface physical` command output below shows the ports that are availble for UfiSpace S9510-28DC platform in the `mode_2_400G` mode.

```
supervisor@rtbrick.net: op> show interface physical
Interface   Admin  Link  Oper  Damp    MAC Address        Speed  Duplex  Uptime
ifp-0/0/0   Up     Up    Up    stable  5c:07:58:78:8f:f9  400G   Full    Tue Dec 02 10:12:59 GMT +0000 2025
ifp-0/0/1   Up     Up    Up    stable  5c:07:58:78:90:01  400G   Full    Tue Dec 02 10:12:59 GMT +0000 2025
ifp-0/0/2   Up     Up    Up    stable  5c:07:58:78:90:09  100G   Full    Tue Dec 02 10:12:53 GMT +0000 2025
ifp-0/0/3   Up     Up    Up    stable  5c:07:58:78:90:0d  100G   Full    Tue Dec 02 10:12:53 GMT +0000 2025
```

Viewing Transceiver Details

The operational commands such as `show transceiver`, `show interface physical`, and `show transceiver <interface>` displays current status, high-level inventory, and detailed diagnostic information for the 400G optics and physical network interfaces on the UfiSpace S9510-28DC platform.

Viewing Transceiver Summary:

The `show transceiver` command provides a list of all installed transceivers across various interfaces on the platform, detailing their module type, name, connector type, power class, vendor, part number, and serial number.

```
supervisor@rtbrick.net: op> show transceiver
Interface      Module Type  Transceiver Name    Connector Type           PC         Vendor        Part Number
Serial Number     Material Number
ifp-0/0/0     QSFP-DD      ZR400-OFEC-16QAM    LC (Lucent Connector)    8(14.0W)   FLEXOPTIX     D.CO164HG.16.yTM
F824HMC           n/a
ifp-0/0/1      QSFP-DD      ZR400-OFEC-16QAM    LC (Lucent Connector)    8(14.0W)   FLEXOPTIX     D.CO164HG.16.yTM
F824GSF           n/a
ifp-0/0/2      QSFP28       100GBASE-LR4        LC (Lucent Connector)    5(4.0W)    LambdaGain    LL1S31B0A
L16C8M0034        T-UNIQSF40907039
ifp-0/0/3      QSFP28       100GBASE-LR4        LC (Lucent Connector)    5(4.0W)    LambdaGain    LL1S31B0A
L16D1O0019        T-UNIQSF40907039
ifp-0/0/4      SFP          10GBASE-CR Passive  Copper Pigtail           n/a        FS            SFPP-PC01
S2108213165-1     n/a
```

Viewing Physical Interfaces

The `show interface physical` command displays the status of all physical interfaces on the platform, including their administrative and operational state, link status, MAC address, configured speed and duplex, and uptime. This summary confirms that the interfaces (like the 400G and 100G ports) are currently operational and stable.

```
supervisor@rtbrick.net: op> show interface physical
Interface       Admin   Link    Oper    Damp      MAC Address          Speed  Duplex  Uptime
ifp-0/0/0       Up      Up      Up      stable    5c:07:58:78:8f:f9    400G   Full    Tue Nov 11 09:48:51 GMT +0000 2025
ifp-0/0/1       Up      Up      Up      stable    5c:07:58:78:90:01    400G   Full    Tue Nov 11 09:48:51 GMT +0000 2025
ifp-0/0/2       Up      Up      Up      stable    5c:07:58:78:90:09    100G   Full    Tue Nov 11 09:48:45 GMT +0000 2025
ifp-0/0/3       Up      Up      Up      stable    5c:07:58:78:90:0d    100G   Full    Tue Nov 11 09:48:45 GMT +0000 2025
cpu-0/0/200     Up      Up      Up      stable    5c:07:58:78:90:c0    100G   Full    Tue Nov 11 09:48:43 GMT +0000 2025
recycle-0/0/211 Up      Up      Up      stable    5c:07:58:78:90:cb    100G   Full    Tue Nov 11 09:48:43 GMT +0000 2025
recycle-0/0/212 Up      Up      Up      stable    5c:07:58:78:90:cc    100G   Full    Tue Nov 11 09:48:43 GMT +0000 2025
recycle-0/0/213 Up      Up      Up      stable    5c:07:58:78:90:cd    100G   Full    Tue Nov 11 09:48:43 GMT +0000 2025
recycle-0/0/214 Up      Up      Up      stable    5c:07:58:78:90:ce    100G   Full    Tue Nov 11 09:48:43 GMT +0000 2025
recycle-0/0/215 Up      Up      Up      stable    5c:07:58:78:90:cf    100G   Full    Tue Nov 11 09:48:43 GMT +0000 2025
```

Viewing 400G Transceiver Details

This example below provides detailed information for the 400G QSFP-DD optical transceiver named ZR400-OFEC-16QAM, including its vendor, part number, power class, connector type (LC), and capability to support a 600km link.

```
supervisor@rtbrick.net: op> show transceiver ifp-0/0/0
```

```
ifp-0/0/0
  Transceiver name: ZR400-OFEC-16QAM, Vendor name: FLEXOPTIX, Module type: QSFP-DD, Serial number: F824HMC
  Part number: D.CO164HG.16.yTM, Material number: n/a
  Power class: 8(14.0W), Power class mode: HIGH
  Connector type: LC (Lucent Connector), Link length support: 600km(smf), Wavelength: 1552.50 nm
  Capabilities: [Tx-Disable, Diagnostic Monitoring, Supply Voltage Monitoring, Temperature Monitoring, Transmitter Power
Measurement]
  Manufactured date: Mon Jul 15 00:00:00 GMT +0000 2024
  Transceiver Diagnostic Monitoring
    Attribute        Value       High Alarm     High Warn   Low Alarm     Low Warn
    Temperature      45.9453 C   False          False       False         False
    Voltage          3.2724 V    False          False       False         False
  Transceiver Lane Diagnostic Monitoring
    Lane: 0
     Attribute       Value         High Alarm   High Warn   Low Alarm     Low Warn
      RxPower        -15.2290 dBm  False        False       False         False
      TxPower        -0.1060 dBm   False        False       False         False
      TxBiascurrent  53.1600 mA    False        False       False         False
```

2.2. Platform Hardware Information

For detailed specifications of each supported hardware platform, see:

- RBFS Multiservice Edge Image on UfiSpace S9510-28DC
- RBFS Multiservice Edge Image on Edgecore CSR440 (AS7535-28XB)
- RBFS Access Leaf and Multiservice Edge Images on UfiSpace S9600-72XC
- RBFS Access Leaf and Multiservice Edge Images on UfiSpace S9600-102XC
- RBFS Access Leaf & Multiservice Edge Images on Edgecore AGR420 (AS7946-74XKSB)
- RBFS Spine Image on UfiSpace S9600-32X
- RBFS Spine Image on Edgecore AGR400 (AS7946-30XB)
- RBFS Multiservice Edge Images on UfiSpace S9610-46DX
- RBFS L2 Wholesale (L2BSA) Image on UfiSpace S9500-22XST

2.2.1. RBFS Multiservice Edge Image on UfiSpace S9510-28DC

The RBFS Multiservice Edge is a software image that supports full BNG functionality on a single image. This image is supported on the UfiSpace S9510-28DC platform.

> RBFS is supported only on the 'Premium' variant of this platform. It is not supported on the 'Standard' variant. For detailed specifications of these variants, refer to the ODM's Datasheet.

Hardware Specification

UfiSpace S9510-28DC Hardware Specification

Model	UfiSpace S9510-28DC
Form-factor	1RU
Switching Capacity	800 Gbps.

Switch ASIC	Broadcom Qumran-2A BCM88483
CPU	Premium: Intel Denverton-NS 8-Core @ 1.7GHz
Role	Multiservice Edge
System Memory	16GB DDR4
Storage (SSD)	Premium: 128GB
Interfaces	• 2 x 400G • 2 x 100G • 24 x 25G
Max. Number of LAG Interfaces Supported Per LAG	28
Number of LAG Members Supported Per LAG	10

Support for 400G ZR+ Optics on UfiSpace S9510-28DC Platform

RBFS supports 400G ZR+ Optics on UfiSpace S9510-28DC Platform. The table below lists the key specifications for the 400G ZR+ Optical Transceiver.

400G ZR+ Optical Transceiver Specifications

Supported Platforms	Product	Module Type Number	Product Type	Cable Type
UfiSpace S9510-28DC	Optical Transceiver	400G QSFP-DD	Optical Transceiver	SMF

For details about configuring 400G ZR+ optics on the UfiSpace S9510-28DC platform, see the Configuring Platform Profiles section.

For more details on the hardware specifications, see S9510-28DC.

2.2.2. RBFS Multiservice Edge Image on Edgecore CSR440 (AS7535-28XB)

The RBFS Multiservice Edge is a software image that supports full BNG functionality on a single image. This image is supported on the Edgecore CSR440 (AS7535-28XB) platform.

Hardware Specification

Edgecore CSR440 (AS7535-28XB) Hardware Specification

Model	Edgecore CSR440 (AS7535-28XB)
Form-factor	1RU, 19 Inch, Rack-Mountable
Switching Capacity	800 Gbps.
Switch ASIC	Broadcom Qumran-2A BCM88483
Co-Processor	—

CPU	Intel Broadwell (8-Core)
Role	Multiservice Edge
System Memory	DDR4 SO-DIMM 2x 8GB SDRAM with ECC support
Storage (SSD)	128 GB
Interfaces	• 24 x SFP28 (each supports 1/10 GbE or 25 GbE) • 2 x 100G QSFP28 (each supports 50/100 GbE) • 2 x 400G QSFP-DD (each supports 50/100/200/400 GbE)
Max. Number of LAG Interfaces Supported Per LAG	28
Number of LAG Members Supported Per LAG	10

For more information, see CSR440.

2.2.3. RBFS Access Leaf and Multiservice Edge Images on UfiSpace S9600-72XC

The RBFS Access Leaf is a software image that supports subscriber termination functionality on the Leaf Switch in a Spine Leaf deployment for BNG. The RBFS Multiservice Edge is a software image that supports full BNG functionality on a single image. Both these images are supported on the UfiSpace S9600-72XC platform.

RBFS is supported on this platform only with the Co-Processor 'Broadcom OP2 BCM16K' (Premium). Other variants of co-processor are not supported.

Hardware Specification

UfiSpace S9600-72XC Hardware Specification

Model	UfiSpace S9600-72XC
Form-factor	2RU, 436W x 87.7H x 609.6D mm (17.17"x3.45"x24")
Switching Capacity	2.4 Tbps. NOTE: 200 Gbps bandwidth is reserved internally, and hence 2.2 Tbps is available for external use.
Switch ASIC	Broadcom Qumran-2C BCM88820
Co-Processor	BCM16K
CPU	Intel Skylake-D D-2145NT 8 Cores @1.9GHz
Role	Access Leaf, Multiservice Edge
Storage (SSD)	128 GB
System Memory	2x 16GB DDR4 R-DIMM with ECC

Interfaces	• 64 x 25GE SFP28 ports • 8 x 100GE QSFP28 ports • 2 x 10GE SFP+ management ports • 1 x RJ45 serial console port
Max. Number of LAG Interfaces Supported Per LAG	72
Number of LAG Members Supported Per LAG	10

For more information, see S9600-72XC.

2.2.4. RBFS Access Leaf and Multiservice Edge Images on UfiSpace S9600-102XC

The RBFS Access Leaf is a software image that supports subscriber termination functionality on the Leaf Switch in a Spine Leaf deployment for BNG. The RBFS Multiservice Edge is a software image that supports full BNG functionality on a single image. Both these images are supported on the UfiSpace S9600-102XC platform.

Hardware Specification

UfiSpace S9600-102XC Hardware Specification

Model	UfiSpace S9600-102XC
Form-factor	2RU in height with physical dimensions of: Width 436mm (17.16”), Depth 609.6mm (24”), and Height 87.7mm (3.45”)
Switching Capacity	2.4 Tbps NOTE: 200 Gbps bandwidth is reserved internally, and hence 2.2 Tbps is available for external use.
Switch ASIC	Broadcom Qumran-2C BCM88820
Co-Processor	BCM16K
CPU	Intel Skylake-D D-2145NT 8 core / 1.9GHz
Role	Access Leaf, Multiservice Edge
Storage (SSD)	128 GB
System Memory	16GB x2 DDR4 ECC RDIMM
Interfaces	• 6 x 40G or 100G QSFP28 ports • 96 x 1G or 10G or 25G SFP28 ports • 2 x 10G SFP+ management ports • 1 x RJ45 serial console port • 1 x 100M or 1000M RJ45 management port • 1 x USB 3.0 Type-A port

Max. Number of LAG Interfaces Supported Per LAG	102
Number of LAG Members Supported Per LAG	10

For more information, see S9600-102XC.

2.2.5. RBFS Access Leaf & Multiservice Edge Images on Edgecore AGR420 (AS7946-74XKSB)

The RBFS Access Leaf is a software image that supports subscriber termination functionality on the Leaf Switch in a Spine Leaf deployment for BNG. This image is supported on the Edgecore AGR420 (AS7946-74XKSB) platform.

Hardware Specification

Edgecore AGR420 Hardware Specification

Model	Edgecore AGR420 (AS7946-74XKSB)
Form-factor	2RU, 19 Inch, Rack-Mountable
Switching Capacity	2.4 Tbps. NOTE: 200 Gbps bandwidth is reserved internally, and hence 2.2 Tbps is available for external use.
Switch ASIC	Broadcom Qumran-2C BCM88820
Co-Processor	BCM16K
CPU	Intel Broadwell (8-Core)
Role	Access Leaf, Multiservice Edge
System Memory	2 x 16 GB
Storage (SSD)	128 GB
Interfaces	• 10 x 100G • 64 x 25G
Max. Number of LAG Interfaces Supported Per LAG	24
Number of LAG Members Supported Per LAG	10

Port LED Definitions for Edgecore AGR420 (AS7946-74XKSB)

The Edgecore AGR420 platform uses port LEDs to indicate link status, operational speed, and SerDes mode. The LED color reflects the active port configuration and is turned off when the link is down or any required SerDes lane is not operational.

The following table provides the LED status definitions for 100G and 25G NIF ports associated with optical transceivers on the Edgecore AGR420 (AS7946-74XKSB) leaf device.

Port Type	Number of Lanes/Serdes Rate (Gb/S)	Serdes Mode	LED1 (Speed/Link) Signaling	LED2 (Activity) Signaling
100G QSFP-DD	4/25.78125	NRZ	Solid Blue (B) Off if one lane is Not linked	Solid Blue (B), blink if activity Off if one lane is Not linked
100G QSFP-28	4/25.78125	NRZ	Solid Blue (B) Off if one lane is Not linked	Solid Blue (B), blink if activity Off if one lane is Not linked
100G QSFP28	4/10.3125	NRZ	Solid Green (G) Off if one lane is Not linked	Solid Green (G), blink if activity Off if one lane is Not linked
25G SFP28	1/25.78125	NRZ	Solid Blue (B) Off if one lane is Not linked	Solid Blue (B), blink if activity Off if one lane is Not linked
25G SFP28	1/10.3125	NRZ	Solid Green (G) Off if one lane is Not linked	Solid Green (G), blink if activity Off if one lane is Not linked
25G SFP28	1/1.25	NRZ	Solid Yellow (R+G) Any of the configured lanes is linked	Solid Yellow (R+G), blink if activity Any of the configured lanes is linked

For more information, see AGR420.

2.2.6. RBFS Spine Image on UfiSpace S9600-32X

The RBFS Spine is a software image that supports aggregation functionality across the access leaves in a Spine Leaf deployment for BNG. This image is supported on UfiSpace S9600-32X platform.

Hardware Specification

UfiSpace S9600-32X Hardware Specification

Model	UfiSpace S9600-32X
Form-factor	2RU, 436W x 87.8H x 762D mm (17.17"x3.46"x30")
Switching Capacity	2.4 Tbps
Switch ASIC	Broadcom Qumran-2C BCM88820
CPU	Intel Skylake-D D-2145NT 8 Core @1.9GHz
Role	Spine
System Memory	1x32GB DDR4 with ECC
Storage (SSD)	128GB

Interfaces	• 31 x 40GE/100GE QSFP28 ports • 4 x 1GE/10GE/25GE SFP28 ports (break out from Port 0) • 1 x RJ45 serial console port
Max. Number of LAG Interfaces Supported Per LAG	32
Number of LAG Members Supported Per LAG	10

10G/25G speeds on the UfiSpace S9600-32X Platform

RBFS supports 10G and 25G speeds on all four SFP28 ports (ifp-0/0/0 through ifp-0/0/3) of the UfiSpace S9600-32X platform. The default port speed is 25G, while 10G can be configured as required.

The following example shows the output of the `show interface physical` command for ports for both 10G and 25G speeds.

```
supervisor@rtbrick.net: cfg> show interface physical
Interface              Admin   Link    Oper    Damp      MAC Address          Speed
Duplex  Uptime
ifp-0/0/0              Up      Up      Up      stable    e8:c5:7a:8f:55:8d    25G
Full    Wed Aug 26 15:00:42 GMT +0000 2026
ifp-0/0/1              Up      Up      Up      stable    e8:c5:7a:8f:55:8e    25G
Full    Wed Aug 26 15:03:32 GMT +0000 2026
ifp-0/0/2              Up      Up      Up      stable    e8:c5:7a:8f:55:8f    10G
Full    Wed Aug 26 15:03:19 GMT +0000 2026
ifp-0/0/3              Up      Up      Up      stable    e8:c5:7a:8f:55:90    10G
Full    Wed Aug 26 15:00:42 GMT +0000 2026
```

For more information on the UfiSpace S9600-32X platform, see S9600-32X.

2.2.7. RBFS Spine Image on Edgecore AGR400 (AS7946-30XB)

The RBFS Spine is a software image that supports aggregation functionality across the access leaves in a Spine Leaf deployment for BNG. This image is supported on Edgecore AGR400 (AS7946-30XB) platform.

Hardware Specification

Edgecore AGR400 Hardware Specification

Model	EdgeCore AGR400 (AS7946-30XB)
Form-factor	2RU, 19 Inch, Rack-Mountable
Switching Capacity	2.4 Tbps
Switch ASIC	Broadcom Qumran-2C BCM88823
Co-Processor	-

CPU	Intel Broadwell (8-Core)
Role	Spine
System Memory	SDRAM DDR4 SO-DIMM 32GB (16 GB x 2)
Storage (SSD)	128 GB
Interfaces	• 26 x 100G • 4 x 25G
Max. Number of LAG Interfaces Supported Per LAG	33
Number of LAG Members Supported Per LAG	10

Port LED Definitions for 400G, 100G, 25G NIF Optical Transceivers on Edgecore AGR400 (AS7946-30XB)

The Edgecore AGR400 platform uses port LEDs to indicate link status, operational speed, and SerDes mode. The LED color reflects the active port configuration and is turned off when the link is down or any required SerDes lane is not operational.

The following table provides the LED status definitions for 400G, 100G, 25G NIF NIF ports associated with optical transceivers on the Edgecore AGR400 (AS7946-30XB) Spine device.

Port Type	Number of Lanes / SerDes Rate (Gb/s)	SerDes Mode	LED1 (Speed/Link) Signaling	LED2 (Activity) Signaling
400G QSFP-DD	8 / 53.125	PAM4	Solid Magenta (R+B). Off if one lane is not linked.	Solid Magenta (R+B), blink if activity. Off if one lane is not linked.
100G QSFP-DD	4 / 25.78125	NRZ	Solid Blue (B). Off if one lane is not linked.	Solid Blue (B), blink if activity. Off if one lane is not linked.
100G QSFP-DD	4 / 10.3125	NRZ	Solid Green (G). Off if one lane is not linked.	Solid Green (G), blink if activity. Off if one lane is not linked.
100G QSFP-28	4 / 25.78125	NRZ	Solid Blue (B). Off if one lane is not linked.	Solid Blue (B), blink if activity. Off if one lane is not linked.
100G QSFP28	4 / 10.3125	NRZ	Solid Green (G). Off if one lane is not linked.	Solid Green (G), blink if activity. Off if one lane is not linked.
25G SFP28	1 / 25.78125	NRZ	Solid Blue (B), blink if activity. Off if the lane is not linked.	Just have LED1

Port Type	Number of Lanes / SerDes Rate (Gb/s)	SerDes Mode	LED1 (Speed/Link) Signaling	LED2 (Activity) Signaling
25G SFP28	1 / 10.3125	NRZ	Solid Green (G), blink if activity. Off if the lane is not linked.	Just have LED1
25G SFP28	1 / 1.25	NRZ	Solid Yellow (R+G), blink if activity. Off if the lane is not linked.	Just have LED1

Port LED Definitions for 400G/100G/25G Breakout Interfaces on Edgecore AGR400 (AS7946-30XB)

The following table provides the LED status definitions for 400G, 100G, 25G NIF breakout interfaces associated with optical transceivers on the Edgecore AGR400 (AS7946-30XB) Spine device.

Port Type	Number of Breakout / SerDes Rate (Gb/s)	SerDes Mode	LED1 (Speed/Link) Signaling	LED2 (Activity) Signaling
400G QSFP-DD	4 / 53.125 (4 × 100G)	PAM4	Solid Blue (B) if any lane is linked. Off if no lane is linked.	Solid Blue (B), blink if any lane is activity. Off if no lane is linked.
400G QSFP-DD	8 / 53.125 (8 × 50G)	PAM4	Solid Red ® if any lane is linked. Off if no lane is linked.	Solid Red ®, blink if any lane is activity. Off if no lane is linked.
400G QSFP-DD	8 / 25.78125 (8 × 25G)	NRZ	Solid Cyan (G+B) if any lane is linked. Off if no lane is linked.	Solid Cyan (G+B), blink if any lane is activity. Off if no lane is linked.
400G QSFP-DD (downgrade to 100G QSFP-DD)	2 / 25.78125 (2 × 50G)	NRZ	Solid Red ® if any lane is linked. Off if no lane is linked.	Solid Magenta Red ®, blink if any lane is activity. Off if no lane is linked.
400G QSFP-DD (downgrade to 100G QSFP-DD)	4 / 25.78125 (4 × 25G)	NRZ	Solid Cyan (G+B) if any lane is linked. Off if no lane is linked.	Solid Cyan (G+B), blink if any lane is activity. Off if no lane is linked.

For more information, see AGR400.

2.2.8. RBFS Multiservice Edge Images on UfiSpace S9610-46DX

The RBFS Multiservice Edge is a software image that supports full BNG functionality on a single image. This image is supported on the UfiSpace S9610-46DX platform.

Hardware Specification

UfiSpace S9610-46DX Hardware Specification

Model	UfiSpace S9610-46DX
Form-factor	2RU in height with physical dimensions of: Width 436mm (17.16”), Depth 762mm (30”), and Height 87.7mm (3.45”)
Switching Capacity	7.2 Tbps NOTE: 800 Gbps bandwidth is reserved internally, and hence 6.4 Tbps (40 x 100, 6 x 400) is available for external use.
Switch ASIC	Broadcom Qumran-2C+ BCM88840
Co-Processor	2 x Broadcom OP2 BCM16K
CPU	Intel Icelake-D 8-Core @ 2.1 GHz
Role	Multiservice Edge
Storage (SSD)	128 GB
System Memory	64 GB
Interfaces	• 6 x 400G QSFP-DD ports (400G ZR/ZR+ support) • 40 x 100G QSFP28 ports (Ports 0 and 21 are disabled when the device is configured to use the 4 x 25G SFP-DD mode.) • 4 x 25G SFP-DD ports or 1GE proprietary SFP-DD port (An alternative to port 0 and port 21.) • 4 x 10G SFP+ management ports or 1GE proprietary SFP-DD port • 1 x RJ45 and Micro USB serial console port • 1 x 100M or 1000M RJ45 management port • 1 x USB 3.0 Type-A port
Number of LAG Members Supported Per LAG	46
Max. Number of LAG Interfaces Supported Per LAG	10

Limitations

The following features or functionalities are not currently supported on the UfiSpace S9610-46DX platform:

- Interface Breakout
- Link Training

- Auto-negotiation
- 1Q and 8Q QoS queue configurations are not supported. Supports only the 4Q.
- Subscriber fragmentation

Interface Breakout Limitation on UfiSpace S9610-46DX

The UfiSpace S9610-46DX platform has hardware limitations that restrict interface breakout.

QSFP28 Breakout

The upper 20 QSFP28 ports (front-panel ports 0 - 19) support breakout into:

- 4 x 25GE

Breakout on an upper QSFP28 port automatically disables its corresponding lower QSFP28 port.

When breakout is enabled on any of these ports:

- The selected 100GE interface is divided into four logical 10GE or 25GE interfaces. The corresponding lower QSFP28 port (front-panel ports 20 - 39, see the following 'Figure.1' and 'Figure.2') is automatically disabled.

In the following front-panel port diagram, boxed ports connected by a line indicate mutually exclusive port pairs.

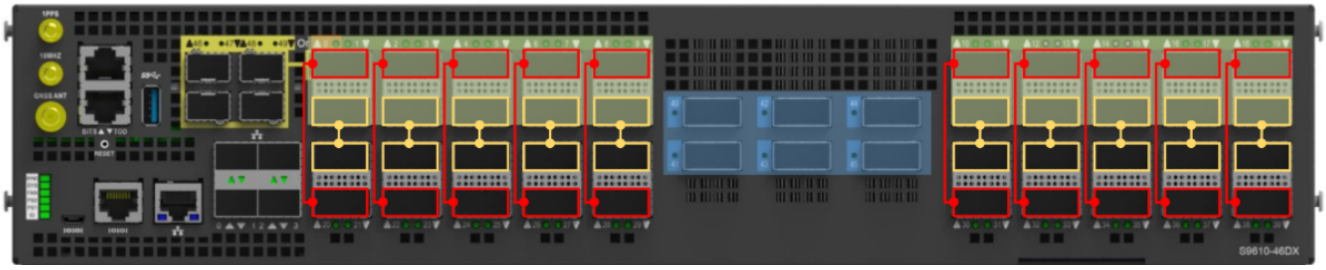

Figure 5. Mutually Exclusive Port Mapping

In the preceding image, the red and yellow box outlines indicate port groups that are mutually exclusive.

Only one port in each mutually exclusive port pair can be active when breakout mode is enabled. Breakout mode is supported only on Ports 0 - 19. Ports 20 - 39 cannot be configured as breakout ports.

The following port pairs are mutually exclusive:

Breakout Port	Disabled Port
0	20
1	21
2	22
3	23
4	24
5	25
6	26
7	27
8	28
9	29
10	30
11	31
12	32
13	33
14	34
15	35
16	36
17	37
18	38
19	39

Figure 6. Port mapping for breakout

QSFP-DD Breakout

All QSFP-DD ports (front-panel ports 40 - 45) support breakout into 4 x 100GE.

Each QSFP-DD port can operate either as a single 400GE interface or as four independent 100GE interfaces.

For more information about Breakout Interfaces, see Breakout Interfaces.

For more information the UfiSpace S9610-46DX platform, see S9610-46DX.

2.2.9. RBFS L2 Wholesale (L2BSA) Image on UfiSpace S9500-22XST

The RBFS L2BSA is a software image that supports transparent forwarding on the A10-NSP interface received from U Interface and vice versa.

Hardware Specification

UfiSpace S9500-22XST Hardware Specification

Model	UfiSpace S9500-22XST
Form-factor	1RU, 440w x 43.5h x 302d mm (17.32" x 1.713" x 11.89")
Switching Capacity	300 Gbps
Switch ASIC	Broadcom Qumran-AX BCM88470
Co-Processor	—
CPU	Intel Broadwell-DE D1519 4 Cores @1.5GHz

Role	L2 Wholesale (L2BSA)
System Memory	1x8GB DDR4 SO-DIMM with ECC
Storage (SSD)	32GB
Interfaces	• 2 x 100GE QSFP28 port • 8 x 25GE SFP28 ports • 8 x 10GE SFP+ ports • 4 x 1GE RJ45 ports*
Number of LAG Groups	22
Number of LAG members per group	10

* The RJ45 ports do not accept transceivers; hence they will not appear in the 'show transceiver' command, even though they are fully supported.

Port LED Mapping (P17, P18, P19, P0, P1) on UfiSpace S9500-22XST Platform

The following table presents how physical switch ports are mapped to LED controller pins or LED indices on the hardware board. It defines the correspondence between the ASIC LED output indices (P0 - Pn) and the physical front-panel NIF ports. This mapping reflects the wiring between the LED controller and the port LEDs.

Front Panel Port Number / Bit Number / LED Color Mapping

Front Panel Port Number	Bit Number	Function	Bit Value	Color	Bit Value	Color
P0	71	1G Link/ACT	1	Green	0	Off
P0	70	10M/100M Link/ACT	1	Yellow	0	Off
P1	69	1G Link/ACT	1	Green	0	Off
P1	68	10M/100M Link/ACT	1	Yellow	0	Off
P2	67	1G Link/ACT	1	Green	0	Off
P2	66	10M/100M Link/ACT	1	Yellow	0	Off
P3	65	1G Link/ACT	1	Green	0	Off
P3	64	10M/100M Link/ACT	1	Yellow	0	Off
P4	55	1G Link/ACT	1	Green	0	Off
P4	54	10M/100M Link/ACT	1	Yellow	0	Off
P5	53	1G Link/ACT	1	Green	0	Off
P5	52	10M/100M Link/ACT	1	Yellow	0	Off
P6	51	1G Link/ACT	1	Green	0	Off
P6	50	10M/100M Link/ACT	1	Yellow	0	Off

Front Panel Port Number	Bit Number	Function	Bit Value	Color	Bit Value	Color
P7	49	1G Link/ACT	1	Green	0	Off
P7	48	10M/100M Link/ACT	1	Yellow	0	Off
P8	47	1G Link/ACT	1	Green	0	Off
P8	46	10M/100M Link/ACT	1	Yellow	0	Off
P9	45	1G Link/ACT	1	Green	0	Off
P9	44	10M/100M Link/ACT	1	Yellow	0	Off
P10	43	1G Link/ACT	1	Green	0	Off
P10	42	10M/100M Link/ACT	1	Yellow	0	Off
P11	41	1G Link/ACT	1	Green	0	Off
P11	40	10M/100M Link/ACT	1	Yellow	0	Off
P12	31	25G Link/ACT	1	Green	0	Off
P12	30	10G/1G Link/ACT	1	Yellow	0	Off
P13	29	25G Link/ACT	1	Green	0	Off
P13	28	10G/1G Link/ACT	1	Yellow	0	Off
P14	27	25G Link/ACT	1	Green	0	Off
P14	26	10G/1G Link/ACT	1	Yellow	0	Off
P15	25	25G Link/ACT	1	Green	0	Off
P15	24	10G/1G Link/ACT	1	Yellow	0	Off
P16	23	25G Link/ACT	1	Green	0	Off
P16	22	10G/1G Link/ACT	1	Yellow	0	Off
P17	21	25G Link/ACT	1	Green	0	Off
P17	20	10G/1G Link/ACT	1	Yellow	0	Off
P18	19	25G Link/ACT	1	Green	0	Off
P18	18	10G/1G Link/ACT	1	Yellow	0	Off
P19	17	25G Link/ACT	1	Green	0	Off
P19	16	10G/1G Link/ACT	1	Yellow	0	Off
P0 (Breakout: P0-0~P0-3)	15	100G/25G Link/ACT	1	Green	0	Off
P0 (Breakout: P0-0~P0-3)	14	40G/10G Link/ACT	1	Yellow	0	Off
P0 (Breakout: P0-0~P0-3)	13	100G/25G Link/ACT	1	Green	0	Off
P0 (Breakout: P0-0~P0-3)	12	40G/10G Link/ACT	1	Yellow	0	Off

Front Panel Port Number	Bit Number	Function	Bit Value	Color	Bit Value	Color
P0 (Breakout: P0-0~P0-3)	11	100G/25G Link/ACT	1	Green	0	Off
P0 (Breakout: P0-0~P0-3)	10	40G/10G Link/ACT	1	Yellow	0	Off
P0 (Breakout: P0-0~P0-3)	9	100G/25G Link/ACT	1	Green	0	Off
P0 (Breakout: P0-0~P0-3)	8	40G/10G Link/ACT	1	Yellow	0	Off
P1 (Breakout: P1-0~P1-3)	7	100G/25G Link/ACT	1	Green	0	Off
P1 (Breakout: P1-0~P1-3)	6	40G/10G Link/ACT	1	Yellow	0	Off
P1 (Breakout: P1-0~P1-3)	5	100G/25G Link/ACT	1	Green	0	Off
P1 (Breakout: P1-0~P1-3)	4	40G/10G Link/ACT	1	Yellow	0	Off
P1 (Breakout: P1-0~P1-3)	3	100G/25G Link/ACT	1	Green	0	Off
P1 (Breakout: P1-0~P1-3)	2	40G/10G Link/ACT	1	Yellow	0	Off
P1 (Breakout: P1-0~P1-3)	1	100G/25G Link/ACT	1	Green	0	Off
P1 (Breakout: P1-0~P1-3)	0	40G/10G Link/ACT	1	Yellow	0	Off

For more information, see S9500-22XST.

2.3. Firmware Versions

To check the firmware versions for a specific platform, connect to the device, access the CLI prompt, and run the `show firmware` command. Additionally, the `show platform` command can be used to display the hardware platform information, which includes the diagnostic firmware (DIAG) version.

A warning is displayed in the banner whenever a user logs in to a device (container) running a firmware version different from the one RtBrick recommends.

Ensure that your hardware platform has the required firmware package (MU/MFU) listed in the table below. For details about performing firmware

> upgrades, refer to the Firmware Upgrade Using Host-Installer section in the RBFS Installation and Licensing Guide.

The table below shows the firmware versions that are embedded in the hardware platforms supported by RBFS Release 26.3.1 (current).

Firmware Versions

Platform	DIAG Version	Firmware Versions

S9510-28DC
UfiSpace Q2A
(BCM88483)
	DIAG_DNX_4.1.4	`x86_64-ufispace_s9510_28dc-r0`
		`Mainboard CPLD: 0.05.003`
		`BIOS: SIADLite_C3000_SERIES_R02.15`
		`BMC: 5.1.000000`
		`HW Rev: 3`
		`HW Build: 0`
		`MU Version: v3.2.1`

CSR440
AS7535-28XB
EdgeCore Q2A
(BCM88483)
	02.02.00.07	`x86_64-accton_as7535_28xb-r0`
		`CPLD: v02.02`
		`FPGA: v52.05`
		`Fan CPLD: v02.01`
		`BMC: v00.04.00`

S9600-72XC
UfiSpace Q2C
(BCM88820)
	0.5.5	`x86_64-ufispace_s9600_72xc-r0`
		`CPU CPLD: 1.17.005`
		`Mainboard CPLD1: 1.09.012`
		`Mainboard CPLD2: 0.09.017`
		`Mainboard CPLD3: 0.09.017`
		`Mainboard CPLD4: 0.18.009`
		`BIOS: SKLD_BIOS_R04.12`
		`BMC: 3.5.000000`
		`HW ID: 2`
		`DEPH ID: 0`
		`SKU ID: 6`
		`ID type: 0`
		`Build ID: 2`
		`MU Version: v3.3.0`

Platform	DIAG Version	Firmware Versions

S9600-102XC
UfiSpace Q2C
(BCM88820)
	0.0.2	`x86_64-ufispace_s9600_102xc-r0`
		`CPU CPLD: 1.17.005`
		`Mainboard CPLD1: 0.00.009`
		`Mainboard CPLD2: 0.00.001`
		`Mainboard CPLD3: 0.00.001`
		`Mainboard CPLD4: 0.00.001`
		`Mainboard CPLD5: 0.00.001`
		`BIOS: SKLD_BIOS_R04.10`
		`BMC: 2.39.000000`
		`HW ID: 2`
		`DEPH ID: 0`
		`SKU ID: 28`
		`ID type: 0`
		`Build ID: 0`
		`MU Version: v2.1.0`

AGR420
AS7946-74XKSB
EdgeCore Q2C
(BCM88820)
	02.0b.00.01_OP2_ILKN_20220224	`x86_64-accton_as7946_74xkb-r0`
		`CPU CPLD: vE3.00`
		`Mainboard CPLD1: v01.01`
		`Mainboard CPLD2: v01.01`
		`FPGA: v51.06`
		`Fan CPLD: v01.05`
		`BMC: v00.03.00`

S9600-32X
UfiSpace Q2C
(BCM88820)
	0.1.8	`x86_64-ufispace_s9600_32x-r0`
		`CPU CPLD: 1.17.005`
		`Mainboard CPLD1: 0.21.006`
		`Mainboard CPLD2: 0.11.004`
		`Mainboard CPLD3: 0.10.004`
		`BIOS: SKLD_BIOS_R04.12`
		`BMC: 3.37.000000`
		`HW ID: 3`
		`Build ID: 7`
		`MU Version: v3.0.2`

AGR400
AS7946-30XB EdgeCore Q2C
(BCM88823)
	02.0a.00.06	`x86_64-accton_as7946-30xb-r0`
		`CPU CPLD: vE3.00`
		`Mainboard CPLD1: v02.01`
		`Mainboard CPLD2: v02.01`
		`FPGA: v52.04`
		`Fan CPLD: v01.04`
		`BMC: v00.02.00`
		`MFU Version: v2.0.0.13`

Platform	DIAG Version	Firmware Versions

S9610-46DX
UfiSpace Q2C+
(BCM88840)
	0.0.2	`x86_64-ufispace_s9610_46dx-r0`
		`  Mainboard CPLD1: 0.08.013`
		`  Mainboard CPLD2: 0.00.002`
		`  Mainboard CPLD3: 0.00.001`
		`  Mainboard CPLD4: 0.00.001`
		`  BIOS: Icld_Hcc_BIOS_v6.3.0`
		`  BMC: 2.53.000000`
		`  HW ID: 3`
		`  DEPH ID: 0`
		`  SKU ID: 46`
		`  ID type: 0`
		`  Build ID: 2`
		`  MU Version: v4.3.0`

S9500-22XST
UfiSpace QAX
(BCM88470)
	4.0.21-1	`#x86_64-ufispace_s9500_22xst-r0`
		`  CPU CPLD: 0x21`
		`  Mainboard CPLD: 0x02`
		`  BIOS: T77O994T01_R04.13`
		`  BMC: 4.8.000000`
		`  HW Rev: 3`
		`  HW Build: 0`
		`  UCD: R0.2`
		`  MU Version: v3.0.1`

2.4. Feature Support Matrix

2.4.1. Overview

RtBrick supports the following images (also known as roles).

- Access-Leaf Image
- Multiservice Edge Image
- Spine Image
- L2 Wholesale (L2BSA) Image

The following sections provide information about what RtBrick features are supported by respective images for each hardware platform.

2.4.2. Access-Leaf Image

The following table shows the RBFS feature support for access-leaf images.

Access-Leaf Images Feature Support

Component	Feature	UfiSpace S9600-72XC (Q2C)	UfiSpace S9600-102XC (Q2C)	EdgeCore AGR420 (AS7946-74XKSB) (Q2C)
Routing Protocols	BGP	Yes	Yes	Yes
	BGP FlowSpec	Yes	Yes	Yes
	BGP RPKI	Yes	Yes	Yes
	IS-IS	No	No	No
	LDP	No	No	No
	OSPFv2/v3	No	No	No
	Route Policy	Yes	Yes	Yes
	Segment Routing (MPLS)	Yes	Yes	Yes
Layer 2 Services	L2X (Local & Remote)	Yes	Yes	Yes
	EVPN-VPWS	Yes	Yes	Yes
	BGP-signaled L2VPN	Yes	Yes	Yes
	LDP-signaled L2VPN	Yes	Yes	Yes
Layer 3 Services	L3VPN	Yes	Yes	Yes

Component	Feature	UfiSpace S9600-72XC (Q2C)	UfiSpace S9600-102XC (Q2C)	EdgeCore AGR420 (AS7946-74XKSB) (Q2C)
Forwarding	HQoS	Yes	Yes	Yes
	Multifield (MF) Classifier	Yes	Yes	Yes
	OAM (IP Ping & Traceroute)	Yes	Yes	Yes
	OAM MPLS Ping	Yes	Yes	Yes
	Ethernet Connectivity Fault Management (CFM)	Yes	Yes	Yes
	BFD	Yes	Yes	Yes
	LLDP	Yes	Yes	Yes
	Inband Management	Yes	Yes	Yes
	LAG (Static, LACP)	Yes	Yes	Yes
	Mirroring	Yes	Yes	Yes
	ECMP & Hierarchical FEC	Yes	Yes	Yes
Multicast	IGMPv2/v3	Yes	Yes	Yes
	PIM-SSM	Yes	Yes	Yes

Component	Feature	UfiSpace S9600-72XC (Q2C)	UfiSpace S9600-102XC (Q2C)	EdgeCore AGR420 (AS7946-74XKSB) (Q2C)
Subscriber Management	PPPoE	Yes	Yes	Yes
	L3 Wholesale (L2TPv2 LAC, 1:1 VLAN)	Yes	Yes	Yes
	L3 Wholesale (L2TPv2 LAC, N:1 VLAN)	Yes	Yes	Yes
	IPoE	Yes	Yes	Yes
	AAA (RADIUS)	Yes	Yes	Yes
	Dual Stack	Yes	Yes	Yes
	Multicast for IPTV	Yes	Yes	Yes
Subscriber Management	L2 Wholesale (L2BSA)	Yes	Yes	Yes
	Lawful Intercept	Yes	Yes	Yes
	Accounting	Yes	Yes	Yes
	PPPoE Single-/double-tagged interfaces	Yes	Yes	Yes
	IPoE Single-/double-tagged interfaces	Yes	Yes	Yes
	PPPoE Untagged Interfaces	Yes	Yes	Yes

Component	Feature	UfiSpace S9600-72XC (Q2C)	UfiSpace S9600-102XC (Q2C)	EdgeCore AGR420 (AS7946-74XKSB) (Q2C)
Subscriber Management	IPoE Untagged Interfaces	Yes	Yes	Yes
	IPoE Hot Active-Active Redundancy	No	No	No
	IPoE Hot Active-Standby Redundancy	No	No	No
	PPPoE Active-Standby Redundancy	No	No	No
	Subscriber Filters	Yes	Yes	Yes
	HTTP Redirect Service	Yes	Yes	Yes
Infrastructure	Logging	Yes	Yes	Yes
	NTP	Yes	Yes	Yes
	Clock Synchronization G.8275.1	Yes	Yes	No
	IPMI	Yes	Yes	Yes

Component	Feature	UfiSpace S9600-72XC (Q2C)	UfiSpace S9600-102XC (Q2C)	EdgeCore AGR420 (AS7946-74XKSB) (Q2C)
Security	Securing the Management Plane	Yes	Yes	Yes
	Securing the Control Plane	Yes	Yes	Yes
	Local User Management	Yes	Yes	Yes
	BGP FlowSpec	Yes	Yes	Yes
	BGP RPKI	Yes	Yes	Yes
	BGP TCP-AO / MD5	Yes	Yes	Yes
	BGP GTSM	Yes	Yes	Yes
	LDP TCP-AO / MD5	Yes	Yes	Yes
	sFlow	Yes	Yes	Yes
Telemetry	Resmon	Yes	Yes	Yes
	ASIC Resource Monitoring	Yes	Yes	Yes
	Prometheus TSDB	Yes	Yes	Yes
	SNMPv2c/SNMPv3	Yes	Yes	Yes

2.4.3. Multiservice Edge Image

The following table shows the RBFS feature support for Multiservice Edge images.

Multiservice Edge Images Feature Support

Component	Feature	UfiSpace S9510-28DC (Q2A)	Edgecore CSR440 (AS7535-28XB) (Q2A)	UfiSpace S9600-72XC (Q2C)	UfiSpace S9600-102XC (Q2C)	Edgecore AGR420 (AS7946-74XKSB) (Q2C)	UfiSpace S9610-46DX (Q2C+)	UfiSpace S9500-22XST (QAX)
Routing Protocols	BGP	Yes	Yes	Yes	Yes	Yes	Yes	Yes
	BGP FlowSpec	Yes	Yes	Yes	Yes	Yes	Yes	Yes
	BGP RPKI	Yes	Yes	Yes	Yes	Yes	Yes	Yes
	IS-IS	Yes	Yes	Yes	Yes	Yes	Yes	Yes
	LDP	Yes	Yes	Yes	Yes	Yes	Yes	Yes
	OSPFv2/v3	Yes	Yes	Yes	Yes	Yes	Yes	Yes
	Route Policy	Yes	Yes	Yes	Yes	Yes	Yes	Yes
	Segment Routing (MPLS)	Yes	Yes	Yes	Yes	Yes	Yes	Yes
Layer 2 Services	L2X (Local)	Yes	Yes	Yes	Yes	Yes	Yes	Yes
	L2X (Remote)	Yes	Yes	Yes	Yes	Yes	No	Yes
	EVPN-VPWS	Yes	Yes	Yes	Yes	Yes	No	Yes
	BGP-signaled L2VPN	Yes	Yes	Yes	Yes	Yes	No	Yes
	LDP-signaled L2VPN	Yes	Yes	Yes	Yes	Yes	No	Yes
Layer 3 Services	Carrier-Grade NAT Appliance	Yes	Yes	Yes	Yes	Yes	No	No

Component	Feature	UfiSpace S9510-28DC (Q2A)	Edgecore CSR440 (AS7535-28XB) (Q2A)	UfiSpace S9600-72XC (Q2C)	UfiSpace S9600-102XC (Q2C)	Edgecore AGR420 (AS7946-74XKSB) (Q2C)	UfiSpace S9610-46DX (Q2C+)	UfiSpace S9500-22XST (QAX)
Forwarding	HQoS	Yes	Yes	Yes	Yes	Yes	Yes	No
	Multifield (MF) Classifier	Yes	Yes	Yes	Yes	Yes	Yes	No
	OAM (IP Ping & Traceroute)	Yes	Yes	Yes	Yes	Yes	Yes	Yes
	OAM MPLS Ping	Yes	Yes	Yes	Yes	Yes	Yes	Yes
	Ethernet Connectivity Fault Management (CFM)	Yes	Yes	Yes	Yes	Yes	Yes	Yes
	BFD	Yes	Yes	Yes	Yes	Yes	Yes	Yes
Forwarding	LLDP	Yes	Yes	Yes	Yes	Yes	Yes	Yes
	Inband Management	Yes	Yes	Yes	Yes	Yes	Yes	Yes
	LAG (Static, LACP)	Yes	Yes	Yes	Yes	Yes	Yes	Yes
	Mirroring	Yes	Yes	Yes	Yes	Yes	Yes	Yes
	ECMP & Hierarchical FEC	Yes	Yes	Yes	Yes	Yes	No	Yes

Component	Feature	UfiSpace S9510-28DC (Q2A)	Edgecore CSR440 (AS7535-28XB) (Q2A)	UfiSpace S9600-72XC (Q2C)	UfiSpace S9600-102XC (Q2C)	Edgecore AGR420 (AS7946-74XKSB) (Q2C)	UfiSpace S9610-46DX (Q2C+)	UfiSpace S9500-22XST (QAX)
Subscriber Management	PPPoE	Yes	Yes	Yes	Yes	Yes	Yes	No
	L3 Wholesale (L2TPv2 LAC, 1:1 VLAN)	Yes	Yes	Yes	Yes	Yes	No	No
	L3 Wholesale (L2TPv2 LAC, N:1 VLAN)	Yes	Yes	Yes	Yes	Yes	No	No
	IPoE	Yes	Yes	Yes	Yes	Yes	No	No
	AAA (RADIUS)	Yes	Yes	Yes	Yes	Yes	Yes	No
	Dual Stack	Yes	Yes	Yes	Yes	Yes	Yes	No

Component	Feature	UfiSpace S9510-28DC (Q2A)	Edgecore CSR440 (AS7535-28XB) (Q2A)	UfiSpace S9600-72XC (Q2C)	UfiSpace S9600-102XC (Q2C)	Edgecore AGR420 (AS7946-74XKSB) (Q2C)	UfiSpace S9610-46DX (Q2C+)	UfiSpace S9500-22XST (QAX)
Subscriber Management	L2BSA (L2 Wholesale)	No	No	Yes	Yes	Yes	No	No
	Lawful Intercept	Yes	Yes	Yes	Yes	Yes	No	No
	Accounting	Yes	Yes	Yes	Yes	Yes	No	No
	PPPoE Single-/double-tagged interfaces	Yes	Yes	Yes	Yes	Yes	Yes	No
	IPoE Single-/double-tagged interfaces	Yes	Yes	Yes	Yes	Yes	No	No
	PPPoE Untagged Interfaces	No	No	Yes	Yes	Yes	Yes	No

Component	Feature	UfiSpace S9510-28DC (Q2A)	Edgecore CSR440 (AS7535-28XB) (Q2A)	UfiSpace S9600-72XC (Q2C)	UfiSpace S9600-102XC (Q2C)	Edgecore AGR420 (AS7946-74XKSB) (Q2C)	UfiSpace S9610-46DX (Q2C+)	UfiSpace S9500-22XST (QAX)
Subscriber Management	IPoE Untagged Interfaces	No	No	Yes	Yes	Yes	No	No
	IPoE Hot Active-Active Redundancy	Yes	Yes	Yes	Yes	Yes	No	No
	IPoE Hot Active-Standby Redundancy	Yes	Yes	Yes	Yes	Yes	No	No
	PPPoE Active-Standby Redundancy	Yes	Yes	Yes	Yes	No	Yes	No
Subscriber Management	Subscriber Filters	Yes	Yes	Yes	Yes	Yes	No	No
	HTTP Redirect Service	Yes	Yes	Yes	Yes	Yes	No	No
	Carrier-Grade NAT	Yes	Yes	Yes	Yes	Yes	No	No

Component	Feature	UfiSpace S9510-28DC (Q2A)	Edgecore CSR440 (AS7535-28XB) (Q2A)	UfiSpace S9600-72XC (Q2C)	UfiSpace S9600-102XC (Q2C)	Edgecore AGR420 (AS7946-74XKSB) (Q2C)	UfiSpace S9610-46DX (Q2C+)	UfiSpace S9500-22XST (QAX)
Infrastructure	Logging	Yes	Yes	Yes	Yes	Yes	Yes	Yes
	NTP	Yes	Yes	Yes	Yes	Yes	Yes	Yes
	Clock Synchronization G.8275.1	No	No	No	No	No	No	No
	IPMI	Yes	Yes	Yes	Yes	Yes	No	Yes
Security	Securing the Management Plane	Yes	Yes	Yes	Yes	Yes	Yes	Yes
	Securing the Control Plane	Yes	Yes	Yes	Yes	Yes	Yes	Yes
	Local User Management	Yes	Yes	Yes	Yes	Yes	Yes	Yes
	BGP FlowSpec	Yes	Yes	Yes	Yes	Yes	Yes	Yes
	BGP TCP-AO / MD5	Yes	Yes	Yes	Yes	Yes	Yes	Yes
	BGP RPKI	Yes	Yes	Yes	Yes	Yes	Yes	Yes
	BGP GTSM	Yes	Yes	Yes	Yes	Yes	Yes	Yes
	LDP TCP-AO / MD5	Yes	Yes	Yes	Yes	Yes	Yes	Yes
	sFlow	Yes	Yes	Yes	Yes	Yes	No	No

Component	Feature	UfiSpace S9510-28DC (Q2A)	Edgecore CSR440 (AS7535-28XB) (Q2A)	UfiSpace S9600-72XC (Q2C)	UfiSpace S9600-102XC (Q2C)	Edgecore AGR420 (AS7946-74XKSB) (Q2C)	UfiSpace S9610-46DX (Q2C+)	UfiSpace S9500-22XST (QAX)
Telemetry	Resmon	Yes	Yes	Yes	Yes	Yes	Yes	Yes
	ASIC Resource Monitoring	Yes	Yes	Yes	Yes	Yes	Yes	Yes
	Prometheus TSDB	Yes	Yes	Yes	Yes	Yes	Yes	Yes
	SNMPv2c/SNMPv3	Yes	Yes	Yes	Yes	Yes	No	Yes

2.4.4. Spine Image

The following table shows the RBFS feature support for spine images.

Spine Images Feature Support

Component	Feature	UfiSpace S9600-32X (Q2C)	EdgeCore AGR400 (AS7946-30XB) (Q2C)
Routing Protocols	BGP	Yes	Yes
	BGP FlowSpec	Yes	Yes
	BGP RPKI	Yes	Yes
	IS-IS	Yes	Yes
	LDP	Yes	Yes
	OSPFv2/v3	Yes	Yes
	Route Policy	Yes	Yes
	Segment Routing (MPLS)	Yes	Yes
Layer 2 Services	L2X (Local & Remote)	Yes	Yes
	EVPN-VPWS	Yes	Yes
	BGP-signaled L2VPN	Yes	Yes
	LDP-signaled L2VPN	Yes	Yes

Component	Feature	UfiSpace S9600-32X (Q2C)	EdgeCore AGR400 (AS7946-30XB) (Q2C)
Forwarding	HQoS	Yes	Yes
	Multifield (MF) Classifier	Yes	Yes
	OAM (IP Ping & Traceroute)	Yes	Yes
	OAM MPLS Ping	Yes	Yes
	Ethernet Connectivity Fault Management (CFM)	Yes	Yes
	LLDP	Yes	Yes
	Inband Management	Yes	Yes
	LAG (Static, LACP)	Yes	Yes
	Mirroring	Yes	Yes
	Breakout Interfaces	Yes	Yes
	ECMP & Hierarchical FEC	Yes	Yes
Multicast	IGMPv2/v3	No	No
	PIM-SSM	Yes	Yes
Infrastructure	Logging	Yes	Yes
	NTP	Yes	Yes
	Clock Synchronization G.8275.1	No	No
	IPMI	Yes	Yes

Component	Feature	UfiSpace S9600-32X (Q2C)	EdgeCore AGR400 (AS7946-30XB) (Q2C)
Security	Securing the Management Plane	Yes	Yes
	Securing the Control Plane	Yes	Yes
	Local User Management	Yes	Yes
	BGP FlowSpec	Yes	Yes
	BGP RPKI	Yes	Yes
	BGP TCP-AO / MD5	Yes	Yes
	BGP GTSM	Yes	Yes
	LDP TCP-AO / MD5	Yes	Yes
	sFlow	Yes	Yes
Telemetry	Resmon	Yes	Yes
	ASIC Resource Monitoring	Yes	Yes
	Prometheus TSDB	Yes	Yes
	SNMPv2c/SNMPv3	Yes	Yes

2.4.5. L2 Wholesale (L2BSA) Image

The features listed below are tested using the switch with the L2BSA image as a L2SBA wholesale appliance.

The following table shows the RBFS feature support for L2 Wholesale (L2BSA) images.

L2 Wholesale (L2BSA) Images Feature Support

Component	Feature	UfiSpace S9500-22XST (QAX)
Routing Protocols	BGP	Yes
	BGP FlowSpec	No
	BGP RPKI	No
	IS-IS	Yes
	LDP	No
	OSPFv2/v3	No
	Route Policy	Yes
	Segment Routing (MPLS)	Yes
Layer 2 Services	L2X (Local & Remote)	Yes
	EVPN-VPWS	No
	BGP-signaled L2VPN	No
	LDP-signaled L2VPN	No

Component	Feature	UfiSpace S9500-22XST (QAX)
Forwarding	HQoS	Yes
	Multifield (MF) Classifier	No
	OAM (IP Ping & Traceroute)	Yes
	OAM MPLS Ping	No
	Ethernet Connectivity Fault Management (CFM)	No
	LLDP	Yes
	Inband Management	Yes
	LAG (Static, LACP)	Yes
	Mirroring	Yes
	ECMP & Hierarchical FEC	No
Infrastructure	Logging	Yes
	NTP	Yes
	Clock Synchronization G.8275.1	No
	IPMI	Yes

Component	Feature	UfiSpace S9500-22XST (QAX)
Security	Securing the Management Plane	Yes
	Securing the Control Plane	Yes
	Local User Management	Yes
	BGP FlowSpec	No
	BGP TCP-AO / MD5	No
	BGP GTSM	No
	LDP TCP-AO / MD5	No
	sFlow	No
Telemetry	Resmon	Yes
	ASIC Resource Monitoring	No
	Prometheus TSDB	Yes
	SNMPv2c/SNMPv3	Yes

2.5. Transceiver Support Matrix

The table below provides a comprehensive overview of the transceivers supported across various platform models.

		Platform	Edgecore AGR400	Edgecore AGR420	Edgecore CSR440	UfiSpace S9500-22XST	UfiSpace S9510-28DC	UfiSpace S9600-102XC	UfiSpace S9600-32X	UfiSpace S9600-72XC	UfiSpace S9610-46DX
Vendor	Transceiver Name	Part Number									
ATOP	10GBASE-ER	APSPD34HM3IDL80	Yes	Yes	Yes	Yes	Yes	Yes	Yes	Yes	Yes
		APSPD54HM3IDL80	Yes	Yes	Yes	Yes	Yes	Yes	Yes	Yes	Yes
		APSPD57HM3IDL80	Yes	Yes	Yes	Yes	Yes	Yes	Yes	Yes	Yes
Amphenol	40GBASE-CR4	606770003	Yes	Yes	Yes	Yes	Yes	Yes	Yes	Yes	Yes
FINISAR CORP.	1GBASE-LX	FTLF1318P3BTL	Yes	Yes	Yes	Yes	Yes	Yes	Yes	Yes	Yes
	1GBASE-SX	FTLF8519P3BNL	Yes	Yes	Yes	Yes	Yes	Yes	Yes	Yes	Yes
		FTLF8519P3BTL	Yes	Yes	Yes	Yes	Yes	Yes	Yes	Yes	Yes
FLEXOPTIX	100G-ER1-30-CAUI-4	Q.B161HG.40.YZ	Yes	Yes	Yes	Yes	Yes	Yes	Yes	Yes	Yes
		Q.B161HG.40.ZY	Yes	Yes	Yes	Yes	Yes	Yes	Yes	Yes	Yes
	10GBASE-LR	P.1396.10.I	Yes	Yes	Yes	Yes	Yes	Yes	Yes	Yes	Yes

		Platform	Edgecore AGR400	Edgecore AGR420	Edgecore CSR440	UfiSpace S9500-22XST	UfiSpace S9510-28DC	UfiSpace S9600-102XC	UfiSpace S9600-32X	UfiSpace S9600-72XC	UfiSpace S9610-46DX
Vendor	Transceiver Name	Part Number									
FLEXOPTIX	ZR400-OFEC-16QAM	D.CO164HG.16.yTM	Yes	No	No	No	Yes	No	No	No	Yes
FS	100G-AOC	Q-4S28AO01	Yes	Yes	Yes	Yes	Yes	Yes	Yes	Yes	Yes
		QSFP-100G-AO01	Yes	Yes	Yes	Yes	Yes	Yes	Yes	Yes	Yes
	100G-CWDM4	QSFP-CWDM4-100G	Yes	Yes	Yes	Yes	Yes	Yes	Yes	Yes	Yes
		QSFP28-IR4-100G	Yes	Yes	Yes	Yes	Yes	Yes	Yes	Yes	Yes
	100GBASE-CR4	Q28-PC005	Yes	Yes	Yes	Yes	Yes	Yes	Yes	Yes	Yes
		Q28-PC01	Yes	Yes	Yes	Yes	Yes	Yes	Yes	Yes	Yes
		Q28-PC015	Yes	Yes	Yes	Yes	Yes	Yes	Yes	Yes	Yes
		Q28-PC02	Yes	Yes	Yes	Yes	Yes	Yes	Yes	Yes	Yes
		Q28-PC03	Yes	Yes	Yes	Yes	Yes	Yes	Yes	Yes	Yes

		Platform	Edgecore AGR400	Edgecore AGR420	Edgecore CSR440	UfiSpace S9500-22XST	UfiSpace S9510-28DC	UfiSpace S9600-102XC	UfiSpace S9600-32X	UfiSpace S9600-72XC	UfiSpace S9610-46DX
Vendor	Transceiver Name	Part Number									
FS	100GBASE-CR4	QSFP-100G-PC005	Yes	Yes	Yes	Yes	Yes	Yes	Yes	Yes	Yes
		QSFP-100G-PC02	Yes	Yes	Yes	Yes	Yes	Yes	Yes	Yes	Yes
	100GBASE-LR4	QSFP-LR4-100G	Yes	Yes	Yes	Yes	Yes	Yes	Yes	Yes	Yes
		QSFP28-BLR4-100G	Yes	Yes	Yes	Yes	Yes	Yes	Yes	Yes	Yes
		QSFP28-IR4-100G	Yes	Yes	Yes	Yes	Yes	Yes	Yes	Yes	Yes
		QSFP28-LR4-100G	Yes	Yes	Yes	Yes	Yes	Yes	Yes	Yes	Yes
	10GBASE-CR Active	SFPP-PC01	Yes	Yes	Yes	Yes	Yes	Yes	Yes	Yes	Yes
	10GBASE-CR Passive	QSFP-4SFP10G-DAC	Yes	Yes	Yes	Yes	Yes	Yes	Yes	Yes	Yes
		SFP-10G-DAC	Yes	Yes	Yes	Yes	Yes	Yes	Yes	Yes	Yes
		SFP-10G-PC005	Yes	Yes	Yes	Yes	Yes	Yes	Yes	Yes	Yes

		Platform	Edgecore AGR400	Edgecore AGR420	Edgecore CSR440	UfiSpace S9500-22XST	UfiSpace S9510-28DC	UfiSpace S9600-102XC	UfiSpace S9600-32X	UfiSpace S9600-72XC	UfiSpace S9610-46DX
Vendor	Transceiver Name	Part Number									
FS	10GBASE-CR Passive	SFP-10G-PC01	Yes	Yes	Yes	Yes	Yes	Yes	Yes	Yes	Yes
		SFP-10G-PC02	Yes	Yes	Yes	Yes	Yes	Yes	Yes	Yes	Yes
		SFPP-PC005	Yes	Yes	Yes	Yes	Yes	Yes	Yes	Yes	Yes
		SFPP-PC01	Yes	Yes	Yes	Yes	Yes	Yes	Yes	Yes	Yes
		SFPP-PC015	Yes	Yes	Yes	Yes	Yes	Yes	Yes	Yes	Yes
		SFPP-PC02	Yes	Yes	Yes	Yes	Yes	Yes	Yes	Yes	Yes
		SFPP-PC025	Yes	Yes	Yes	Yes	Yes	Yes	Yes	Yes	Yes
		SFPP-PC03	Yes	Yes	Yes	Yes	Yes	Yes	Yes	Yes	Yes
	10GBASE-ER	SFP-10GER-31	Yes	Yes	Yes	Yes	Yes	Yes	Yes	Yes	Yes
	10GBASE-LR	SFP-10G-BX	Yes	Yes	Yes	Yes	Yes	Yes	Yes	Yes	Yes

		Platform	Edgecore AGR400	Edgecore AGR420	Edgecore CSR440	UfiSpace S9500-22XST	UfiSpace S9510-28DC	UfiSpace S9600-102XC	UfiSpace S9600-32X	UfiSpace S9600-72XC	UfiSpace S9610-46DX
Vendor	Transceiver Name	Part Number									
FS	10GBASE-LR	SFP-10G23-BX10	Yes	Yes	Yes	Yes	Yes	Yes	Yes	Yes	Yes
		SFP-10GLR-31	Yes	Yes	Yes	Yes	Yes	Yes	Yes	Yes	Yes
	10GBASE-LRM	SFP-10GLRM-31	Yes	Yes	Yes	Yes	Yes	Yes	Yes	Yes	Yes
	1GBASE-LX	SFP1G-LX-31	Yes	Yes	Yes	Yes	Yes	Yes	Yes	Yes	Yes
	1GBASE-T	SFP-GB-GE-T	Yes	Yes	Yes	Yes	Yes	Yes	Yes	Yes	Yes
		SFP-GE-T	Yes	Yes	Yes	Yes	Yes	Yes	Yes	Yes	Yes
	25GAUI-C2M-AOC	Q-4S28AO01	Yes	Yes	Yes	Yes	Yes	Yes	Yes	Yes	Yes
	25GBASE-CR	S28-PC01	Yes	Yes	Yes	Yes	Yes	Yes	Yes	Yes	Yes
		S28-PC015	Yes	Yes	Yes	Yes	Yes	Yes	Yes	Yes	Yes
		S28-PC02	Yes	Yes	Yes	Yes	Yes	Yes	Yes	Yes	Yes

		Platform	Edgecore AGR400	Edgecore AGR420	Edgecore CSR440	UfiSpace S9500-22XST	UfiSpace S9510-28DC	UfiSpace S9600-102XC	UfiSpace S9600-32X	UfiSpace S9600-72XC	UfiSpace S9610-46DX
Vendor	Transceiver Name	Part Number									
FS	25GBASE-LR	SFP-25GLR-31	Yes	Yes	Yes	Yes	Yes	Yes	Yes	Yes	Yes
	25GBASE-SR	SFP-25GLRS-31	Yes	Yes	Yes	Yes	Yes	Yes	Yes	Yes	Yes
		SFP28-25GLR-31	Yes	Yes	Yes	Yes	Yes	Yes	Yes	Yes	Yes
	40GBASE-CR4	QSFP-4SFP10G-DAC	Yes	Yes	Yes	Yes	Yes	Yes	Yes	Yes	Yes
FiberStore	100G-PSM4	QSFP28-100G-DAC	Yes	Yes	Yes	Yes	Yes	Yes	Yes	Yes	Yes
	100GBASE-CR4	Q28-PC01	Yes	Yes	Yes	Yes	Yes	Yes	Yes	Yes	Yes
		Q28-PC02	Yes	Yes	Yes	Yes	Yes	Yes	Yes	Yes	Yes
		QSFP28-100G-DAC	Yes	Yes	Yes	Yes	Yes	Yes	Yes	Yes	Yes
	10GBASE-CR Passive	QSFP-4SFP10G-DAC	Yes	Yes	Yes	Yes	Yes	Yes	Yes	Yes	Yes
		SFP-10G-DAC	Yes	Yes	Yes	Yes	Yes	Yes	Yes	Yes	Yes

		Platform	Edgecore AGR400	Edgecore AGR420	Edgecore CSR440	UfiSpace S9500-22XST	UfiSpace S9510-28DC	UfiSpace S9600-102XC	UfiSpace S9600-32X	UfiSpace S9600-72XC	UfiSpace S9610-46DX
Vendor	Transceiver Name	Part Number									
FiberStore	1GBASE-CX	SFP-10G-AOC	Yes	Yes	Yes	Yes	Yes	Yes	Yes	Yes	Yes
	1GBASE-LX	SFP1G-LX-31	Yes	Yes	Yes	Yes	Yes	Yes	Yes	Yes	Yes
	40GBASE-CR4	QSFP-4SFP10G-DAC	Yes	Yes	Yes	Yes	Yes	Yes	Yes	Yes	Yes
Intel Corp	10GBASE-CR Passive	821-24-031-02	Yes	Yes	Yes	Yes	Yes	Yes	Yes	Yes	Yes
LINKTEL	10GBASE-ER	LX4254IDH-ADG	Yes	Yes	Yes	Yes	Yes	Yes	Yes	Yes	Yes
		LX4351IDH-ADG	Yes	Yes	Yes	Yes	Yes	Yes	Yes	Yes	Yes
		LX4354IDH-ADG	Yes	Yes	Yes	Yes	Yes	Yes	Yes	Yes	Yes
	10GBASE-LR	LX4002EDR-ADG	Yes	Yes	Yes	Yes	Yes	Yes	Yes	Yes	Yes
		LX4002IDH-ADG	Yes	Yes	Yes	Yes	Yes	Yes	Yes	Yes	Yes
	1GBASE-LX	LX1022EDR-ADG	Yes	Yes	Yes	Yes	Yes	Yes	Yes	Yes	Yes

		Platform	Edgecore AGR400	Edgecore AGR420	Edgecore CSR440	UfiSpace S9500-22XST	UfiSpace S9510-28DC	UfiSpace S9600-102XC	UfiSpace S9600-32X	UfiSpace S9600-72XC	UfiSpace S9610-46DX
Vendor	Transceiver Name	Part Number									
LINKTEL	1GBASE-LX	LX1034IDS-ADG	Yes	Yes	Yes	Yes	Yes	Yes	Yes	Yes	Yes
		LX1581IDL-ADG	Yes	Yes	Yes	Yes	Yes	Yes	Yes	Yes	Yes
		LX1661IDR-ADG	Yes	Yes	Yes	Yes	Yes	Yes	Yes	Yes	Yes
		LX1671IDL-ADG	Yes	Yes	Yes	Yes	Yes	Yes	Yes	Yes	Yes
	1GBASE-T	LX1801INA-ADG	Yes	Yes	Yes	Yes	Yes	Yes	Yes	Yes	Yes
LambdaGain	100G-CWDM4	LL1C31A2A	Yes	Yes	Yes	Yes	Yes	Yes	Yes	Yes	Yes
	100GBASE-CR4	LDL1-010	Yes	Yes	Yes	Yes	Yes	Yes	Yes	Yes	Yes
	100GBASE-LR4	LL1S31B0A	Yes	Yes	Yes	Yes	Yes	Yes	Yes	Yes	Yes
	100GE-FR	LL4S31A8A	Yes	Yes	Yes	Yes	Yes	Yes	Yes	Yes	Yes
	40GBASE-CR4	LDYK1-020	Yes	Yes	Yes	Yes	Yes	Yes	Yes	Yes	Yes

		Platform	Edgecore AGR400	Edgecore AGR420	Edgecore CSR440	UfiSpace S9500-22XST	UfiSpace S9510-28DC	UfiSpace S9600-102XC	UfiSpace S9600-32X	UfiSpace S9600-72XC	UfiSpace S9610-46DX
Vendor	Transceiver Name	Part Number									
SmartOptics		DQD003-001C-SO	Yes	No	No	No	Yes	No	No	No	Yes
	100GBASE-ER4	SO-QSFP28-ER4	Yes	Yes	Yes	Yes	Yes	Yes	Yes	Yes	Yes
Smartoptics		TDQ033-TUNC-SO	Yes	No	No	No	Yes	No	No	No	Yes
WTD	10GBASE-ER	RTXM227-994-C93	Yes	Yes	Yes	Yes	Yes	Yes	Yes	Yes	Yes
		RTXM228-424-ADG	Yes	Yes	Yes	Yes	Yes	Yes	Yes	Yes	Yes
		RTXM228-425-ADG	Yes	Yes	Yes	Yes	Yes	Yes	Yes	Yes	Yes

2.6. Resource Limits/Feature Support

Limiting the resource usage or consumption (wherever applicable) helps to improve the system stability and also restricts over utilization of system capacity. In RBFS, the usage limits for the following resources are pre-defined:

- IPv4 Route Count
- IPv6 Route Count
- NAT44 Rule Count
- MTU Profile

- L3 MTU-Profile
- Subscriber MTU Profile
- Physical MTU Profile

In addition, you can track the resource usage of the following features.

- 6PE label
- High Precision QoS

You can specify resource limits on the following images (also known as roles).

- [platform:resource_limit:::limit-access-leaf]
- [platform:resource_limit:::limit-multiservice-edge]
- [platform:resource_limit:::limit-spine]
- [platform:resource_limit:::limit-l2bsa]

2.6.1. Access Leaf Image - Feature/Resource Limits

Module	Feature / Field	UfiSpace S9600-72XC (Q2C)	UfiSpace S9600-102XC (Q2C)	Edgecore AGR420 (AS7946-74XKSB) (Q2C)
FIB	IPv4 Route Count	1200000	1200000	1200000
	IPv6 Route Count	250000	250000	250000
	Low Rate Shaping Enabled (<1,000 Kbps)	Yes	Yes	Yes
	ECMP Maximum Next-hop Count	4	4	4
CONFD	MTU-Profile Count	8	8	8
	L3 MTU-Profile Count	3	3	3
	Subscriber MTU-Profile Count	6	6	6
	Physical MTU Profile Count	8	8	8
BGP	6PE label value	2	2	2
	BGP FlowSpec ACL	1000	1000	1000
MPLS	MPLS Stack Depth	8	8	8

2.6.2. Multiservice Edge Image - Feature/Resource Limits

Module	Feature / Field	UfiSpace S9510-28DC (Q2A)	EdgeCore CSR440 (AS7535-28XB) (Q2A)	UfiSpace S9600-72XC (Q2C)	UfiSpace S9600-102XC (Q2C)	Edgecore AGR420 (AS7946-74XKSB) (Q2C)	UfiSpace S9610-46DX (Q2C+)
FIB	IPv4 Route Count	1350000	1350000	1350000	1350000	1350000	1350000
	IPv6 Route Count	300000	300000	300000	300000	300000	300000
	NAT44 Rule Count	150000	150000	3400000	3400000	3400000	No
	Low Rate Shaping Enabled (<1,000 Kbps)	No	No	No	No	No	No
	ECMP Maximum Next-hop Count	2	2	4	4	4	4
CONFD	MTU-Profile Count	8	8	8	8	8	8
	L3 MTU-Profile Count	3	3	3	3	3	3
	Subscriber MTU-Profile Count	5	5	6	6	6	6
	Physical MTU Profile Count	8	8	8	8	8	8
BGP	6PE label value	2	2	2	2	2	2
	BGP FlowSpec ACL	1000	1000	1000	1000	1000	1000
MPLS	MPLS Stack Depth	8	8	8	8	8	8

2.6.3. Spine Image - Feature/Resource Limits

Module	Feature / Field	UfiSpace S9600-32X (Q2C)	EdgeCore AGR400 (AS7946-30XB) (Q2C)
FIB	IPv4 Route Count	1350000	1350000
	IPv6 Route Count	300000	300000
	Low Rate Shaping Enabled (<1,000 Kbps)	No	No
	ECMP Maximum Next-hop Count	4	4
CONFD	MTU-Profile Count	8	8
	L3 MTU-Profile Count	3	3
	Subscriber MTU-Profile Count	6	6
	Physical MTU Profile Count	8	8
BGP	6PE label value	2	2
	BGP FlowSpec ACL	1000	1000
MPLS	MPLS Stack Depth	8	8

2.6.4. L2 Wholesale (L2BSA) Image - Feature/Resource Limits

Module	Feature / Field	UfiSpace S9500-22XST (QAX)
FIB	IPv4 Route Count	N/A
	IPv6 Route Count	N/A
	ECMP Maximum Next-hop Count	1
CONFD	MTU-Profile Count	8
	L3 MTU-Profile Count	3
	Subscriber MTU-Profile Count	5
	Physical MTU Profile Count	8

Module	Feature / Field	UfiSpace S9500-22XST (QAX)
BGP	6PE label value	2
	BGP FlowSpec ACL	1000
MPLS	MPLS Stack Depth	2

2.6.5. Show CLI for Displaying ACL Table Information

The `show acl table` command displays the access control list table information. The options for the `show acl table` command varies depending on the platforms and their roles.

Syntax:

show acl table <options>

The following are the ACL table types supported across different platforms and their respective roles:

Supported CLI options on the Q2A Multiservice Edge platform:

Option	Description
l2	Displays the information for Layer 2 ACL table.
li	Displays the information for Lawful Interception (LI) ACL table.
l3v4	Displays the information for IPv4 Layer 3 ACL table.
l3v6	Displays the information for IPv46 Layer 3 ACL table.
policer	Displays information related to traffic policers configured in the system.

Supported CLI Option on the Q2C Multiservice Edge Platform:

Option	Description
l2	Displays the information for Layer 2 ACL table.
li	Displays the information for Lawful Interception (LI) ACL table.
pmf_mf_de_act	Displays the information for packet matching function with match fields for deactivation rules.
pmf_l3_de_act	Displays the information for packet matching function for Layer 3 deactivation rules.
ext_l3v4_mf	Displays the information for extended IPv4 Layer 3 ACL table.
ext_l3v6_mf	Displays the information for extended IPv6 Layer 3 ACL table.
ext_l3v4	Displays the information for the extended IPv4 Layer 3 ACL table.
ext_l3v6	Displays the information for extended IPv6 Layer 3 ACL table.
l3v4	Displays the information for the extended IPv4 Layer 3 ACL table.
ext_policer	Displays the information for ACL table type for applying policers on matched traffic.
policer_level	Displays the information for the policer levels.
pmf_policer_de_act	Displays the information for packet matching function for policer deactivation rules.

Example:

```
supervisor@rtbrick>rtbrick.net: cfg> show acl table
  <cr>
  ext_l3v4              ACL table type
  ext_l3v4_mf           ACL table type
  ext_l3v6              ACL table type
  ext_l3v6_mf           ACL table type
  ext_policer           ACL table type
  l2                    ACL table type
  l3v4                  ACL table type
  li                    ACL table type
  pmf_l3_de_act         ACL table type
  pmf_mf_de_act         ACL table type
  pmf_policer_de_act    ACL table type
  policer_level         ACL table type
```

Supported CLI options on the Q2C Spine (UfiSpace) Platforms:

Option	Description
l2	Displays the information for Layer 2 ACL table.
l3v4	Displays the information for standard IPv4 Layer 3 ACL table.
l3v6	Displays the information for standard IPv6 Layer 3 ACL table.
policer	Displays information related to traffic policers configured in the system.
l2_cp	Displays information about Layer 2 control protocol packets.
sampling_egress	Displays egress packet sampling configuration information.

Supported CLI options on the Q2C Access Leaf (UfiSpace) Platforms:

Option	Description
l2	Displays the information for Layer 2 ACL table.
li	Displays the information for Lawful Interception (LI) ACL table.
pmf_mf_de_act	Displays the information for packet matching function with match fields for deactivation rules.
pmf_l3_de_act	Displays the information for packet matching function for Layer 3 deactivation rules.
ext_l3v4_mf	Displays the information for extended IPv4 Layer 3 ACL table.
ext_l3v6_mf	Displays the information for extended IPv6 Layer 3 ACL table.
ext_l3v4	Displays the information for the extended IPv4 Layer 3 ACL table.
ext_l3v6	Displays the information for extended IPv6 Layer 3 ACL table.
l3v4	Displays the information for standard IPv4 Layer 3 ACL table.

Option	Description
ext_policer	Displays the information for ACL table type for applying policers on matched traffic.
policer_level	Displays the information for the policer levels.
pmf_policer_de_act	Displays the information for packet matching function for policer deactivation rules.

Example:

```
supervisor@rtbrick.net: cfg> show acl table l3v4 direction ingress
Table name: L3V4_INGRESS
Profile id: default
Table stage: ipmf1
Table priority: 5
Handle: 40
Matches supported:
  source_ipv4_prefix
  destination_ipv4_prefix
  ipv4_protocol
  ipv4_tos
  ip_has_options
  ip_tunnel_type
  source_l4_port
  destination_l4_port
  forward_class
  in_vlan_port
  tcp_ctrl_flags
Actions supported:
  drop
  trap_id
  redirect_to_cpu
  policer_and_counter
  forward_class
  remark_codepoint
  fwd_type_ipv4
Contexts supported:
  fwd_type_ipv4_ipmf1
```

2.6.6. Static, System, and Dynamic Label Ranges

The static, system, and dynamic label ranges provide greater flexibility in label management. The total allocatable label range is from 0 to 1,048,575.

- **Static Label Range**: Labels in this range are manually configured by administrators and assigned to specific network service protocols.
- **System Label Range**: Labels in this range include the labels reserved for internal system functions. These labels are not available for user configuration.

- **Dynamic Label Range**: Labels in this range are automatically allocated and managed by network protocols, such as LDP. They are assigned as needed and may change dynamically.

Allocation of Label Ranges

Static, System, and Dynamic Label Allocation Ranges		
Static	**System**	**Dynamic**
0 - 499,967 and 999,936 - 1,048,575	499,968 - 519,935	519,936 - 999,935

- In the static range 0 - 499,967, only the range 256 - 499,967 can be used for allocation.
- Static and dynamic ranges can be viewed using the show pool block command.

The output of the show pool block command is displayed as follows:

```
supervisor@rtbrick: cfg> show pool block
Resource Type       Module Name                         Block Size         Block Range
LABEL               poold                                   519936          0 - 519935
LABEL               poold                                    48640    999936 - 1048575
LABEL               ldp                                       4096     519936 - 524031
LABEL               bgp                                       4096     524032 - 528127
```

Registered Address	Support	Sales
40268, Dolerita Avenue Fremont CA 94539		
+1-650-351-2251		+91 80 4850 5445
http://www.rtbrick.com	support@rtbrick.com	sales@rtbrick.com

©Copyright 2024 RtBrick, Inc. All rights reserved. The information contained herein is subject to change without notice. The trademarks, logos and service marks ("Marks") displayed in this documentation are the property of RtBrick in the United States and other countries. Use of the Marks are subject to RtBrick's Term of Use Policy, available at https://www.rtbrick.com/privacy. Use of marks belonging to other parties is for informational purposes only.

2.7. ACL Match/Action Matrix

The Access Control List (ACL) match/action matrix defines the conditions a packet must meet (the "match") and the resulting behavior applied to that traffic (the "action"). The tables below outline the match/action support available for user-defined, Layer-2, and Multi-field Classifer ACLs.

2.7.1. User-Defined L3v4 ACL

Match Criteria

User-Defined L3v4 ACL Match	S9600-72XC / S9600-102XC / AGR420 (Q2C Access Leaf)	S9600-32X / AGR400 (Q2C Spine)	S9510-28DC / CSR440 (Q2A Multiservice Edge)	S9600-72XC / S9600-102XC / S9610-46DX / AGR420 (Q2C Multiservice Edge 4q, 1q, NAT 4q, NAT 1q)	S9500-22XST (QAX L2 Wholesale (L2BSA))
destination-ipv4-local	Yes	Yes	Yes	Yes	Yes
destination-ipv4-prefix	Yes	Yes	Yes	Yes	Yes
destination-ipv4-prefix-list	Yes	Yes	Yes	Yes	Yes
destination-l4-port	Yes	Yes	Yes	Yes	Yes
direction egress	No	No	No	No	No
direction ingress	Yes	Yes	Yes	Yes	Yes
instance	Yes	Yes	Yes	Yes*	No
interface	No	No	No	No	No
ip-options	No	Yes	Yes	No	Yes
ip-protocol	Yes	Yes	Yes	Yes	Yes
ipv4-dscp	Yes	Yes	Yes	Yes	Yes
ipv4-tos	Yes	Yes	Yes	Yes	Yes
l2tp-ppp-lcp	No	Yes	No	No	No
logical-interface	Yes	Yes	Yes	Yes	Yes
match-mpls-traffic	No	No	No	No	Yes
source-ipv4-prefix	Yes	Yes	Yes	Yes	Yes
source-ipv4-prefix-list	Yes	Yes	Yes	Yes	Yes

User-Defined L3v4 ACL Match	S9600-72XC / S9600-102XC / AGR420 (Q2C Access Leaf)	S9600-32X / AGR400 (Q2C Spine)	S9510-28DC / CSR440 (Q2A Multiservice Edge)	S9600-72XC / S9600-102XC / S9610-46DX / AGR420 (Q2C Multiservice Edge 4q, 1q, NAT 4q, NAT 1q)	S9500-22XST (QAX L2 Wholesale (L2BSA))
source-l4-port	Yes	Yes	Yes	Yes	Yes
tcp-control	Yes	Yes	Yes	Yes	No
traffic-class	No	Yes	Yes	No	No
ttl	No	No	No	No	Yes
* The match criteria `instance` is not supported for NAT 4q and NAT 1q on the S9600-72XC, S9600-102XC, and AGR420 (Multiservice Edge) platforms.					

Action Matrix

User-Defined L3v4 ACL Action	S9600-72XC / S9600-102XC / AGR420 (Q2C Access Leaf)	S9600-32X / AGR400 (Q2C Spine)	S9510-28DC / CSR440 (Q2A Multiservice Edge)	S9600-72XC / S9600-102XC / S9610-46DX / AGR420 (Q2C Multiservice Edge 4q, 1q, NAT 4q, NAT 1q)	S9500-22XST (QAX L2 Wholesale (L2BSA))
capture	No	No	No	No	No
drop	Yes	Yes	Yes	Yes	Yes
forward-class	Yes*	Yes	Yes	Yes*	Yes
mirror	No	Yes	Yes	No	Yes
permit	Yes	Yes	Yes	Yes	Yes
policer-name	Yes	Yes	Yes	Yes	Yes
redirect-to-cpu	Yes	Yes	Yes	Yes	Yes
remark-codepoint	No	Yes	Yes	No	No
statistics	Yes	Yes	Yes	Yes	Yes
traffic-sample	Yes	Yes	Yes	Yes	No
trap	Yes	Yes	Yes	Yes	Yes

User-Defined L3v4 ACL Action	S9600-72XC / S9600-102XC / AGR420 (Q2C Access Leaf)	S9600-32X / AGR400 (Q2C Spine)	S9510-28DC / CSR440 (Q2A Multiservice Edge)	S9600-72XC / S9600-102XC / S9610-46DX / AGR420 (Q2C Multiservice Edge 4q, 1q, NAT 4q, NAT 1q)	S9500-22XST (QAX L2 Wholesale (L2BSA))
* The action `forward-class` is supported on S9600-72XC, S9600-102XC, AGR420 (Q2C Access Leaf) and S9600-72XC, S9600-102XC, AGR420 (Q2C Multiservice Edge) if a policer is configured.					

2.7.2. User-Defined L3v6 ACL

Match Criteria

User-Defined L3v6 ACL Match	S9600-72XC / S9600-102XC / AGR420 (Q2C Access Leaf)	S9600-32X / AGR400 (Q2C Spine)	S9510-28DC / CSR440 (Q2A Multiservice Edge)	S9600-72XC / S9600-102XC / S9610-46DX / AGR420 (Q2C Multiservice Edge)	S9500-22XST (QAX Multiservice Edge)	S9500-22XST (QAX L2 Wholesale (L2BSA))
destination-ipv6-local	Yes	Yes	Yes	Yes	Yes	Yes
destination-ipv6-prefix	Yes	Yes	Yes	Yes	Yes	Yes
destination-ipv6-prefix-list	Yes	Yes	Yes	Yes	Yes	Yes
destination-l4-port	Yes	Yes	Yes	Yes	Yes	Yes
direction egress	No	No	No	No	No	No
direction ingress	Yes	Yes	Yes	Yes	Yes	Yes
interface	No	Yes	Yes	No	No	No
ip-protocol	Yes	Yes	Yes	Yes	Yes	Yes
ipv6-tc	Yes	Yes	Yes	Yes	Yes	Yes
logical-interface	Yes	No	No	Yes	No	No

User-Defined L3v6 ACL Match	S9600-72XC / S9600-102XC / AGR420 (Q2C Access Leaf)	S9600-32X / AGR400 (Q2C Spine)	S9510-28DC / CSR440 (Q2A Multiservice Edge)	S9600-72XC / S9600-102XC / S9610-46DX / AGR420 (Q2C Multiservice Edge)	S9500-22XST (QAX Multiservice Edge)	S9500-22XST (QAX L2 Wholesale (L2BSA))
source-ipv6-prefix	Yes	Yes	Yes	Yes	Yes	Yes
source-ipv6-prefix-list	Yes	Yes	Yes	Yes	Yes	Yes
source-l4-port	Yes	Yes	Yes	Yes	Yes	Yes
traffic-class	No	No	No	No	No	Yes

Action Matrix

User-Defined L3v6 ACL Action	S9600-72XC / S9600-102XC / AGR420 (Q2C Access Leaf)	S9600-32X / AGR400 (Q2C Spine)	S9510-28DC / CSR440 (Q2A Multiservice Edge)	S9600-72XC / S9600-102XC / S9610-46DX / AGR420 (Q2C Multiservice Edge)	S9500-22XST (QAX L2 Wholesale (L2BSA))
capture	No	No	No	No	No
drop	Yes	Yes	Yes	Yes	Yes
forward-class	Yes*	Yes	Yes	Yes*	Yes
mirror	No	No	No	No	Yes
permit	Yes	Yes	Yes	Yes	Yes
policer-name	Yes	Yes	Yes	Yes	Yes
redirect-to-cpu	Yes	Yes	Yes	Yes	Yes
statistics	Yes	Yes	Yes	Yes	Yes
traffic-sample	Yes	Yes	Yes	Yes	No
* The action `forward-class` is supported on S9600-72XC, S9600-102XC, AGR420 (Q2C Access Leaf) and S9600-72XC, S9600-102XC, AGR420 (Q2C Multiservice Edge) if a policer is configured.					

2.7.3. L2 ACL

Match Criteria

L2 ACL Match	S9600-72XC / S9600-102XC / AGR420 (Q2C Access Leaf)	S9600-32X / AGR400 (Q2C Spine)	S9510-28DC / CSR440 (Q2A Multiservice Edge)	S9600-72XC / S9600-102XC / S9610-46DX / AGR420 (Q2C Multiservice Edge)	S9500-22XST (QAX L2 Wholesale (L2BSA))
destination-mac	Yes	Yes	Yes	Yes	Yes
direction egress	No	No	No	No	No
direction ingress	Yes	Yes	Yes	Yes	Yes
ethertype	Yes	Yes	Yes	Yes	Yes
inner-tag-protocol-id	No	No	No	No	Yes
inner-vlan	Yes	Yes	Yes	Yes	Yes
inner-vlan-cfi	No	No	No	No	Yes
inner-vlan-priority	No	No	No	No	Yes
interface	Yes	Yes	Yes	Yes	Yes
interface-meta-data	Yes	Yes	Yes	Yes	No
logical-interface	Yes	Yes	Yes	Yes	Yes
outer-tag-protocol-id	No	No	No	No	Yes
outer-vlan	Yes	Yes	Yes	Yes	Yes
outer-vlan-cfi	No	No	No	No	Yes
outer-vlan-priority	No	No	No	No	Yes
service-inner-vlan-priority	Yes	No	No	Yes	No
service-outer-vlan-priority	Yes	No	No	Yes	No
source-mac	Yes	Yes	Yes	Yes	Yes
traffic-class	No	No	No	No	Yes

Action Matrix

L2 ACL Action	S9600-72XC / S9600-102XC / AGR420 (Q2C Access Leaf)	S9600-32X / AGR400 (Q2C Spine)	S9510-28DC / CSR440 (Q2A Multiservice Edge)	S9600-72XC / S9600-102XC / S9610-46DX / AGR420 (Q2C Multiservice Edge)	S9500-22XST (QAX L2 Wholesale (L2BSA))
capture	No	No	No	No	No
drop	Yes	No	Yes	Yes	Yes
forward-class	Yes	Yes	Yes	Yes	Yes
mirror	Yes	Yes	Yes	No	Yes
permit	Yes	Yes	Yes	Yes	Yes
policer-name	Yes	Yes	Yes	Yes	Yes
redirect-to-cpu	Yes	Yes	Yes	Yes	Yes
statistics	Yes	Yes	Yes	Yes	Yes
traffic-sample	Yes	Yes	Yes	Yes	Yes

2.7.4. Multifield Classifier (MF) L3v4 ACL

Match Criteria

MF L3v4 ACL Match	S9600-72XC / S9600-102XC / AGR420 (Q2C Access Leaf)	S9600-32X / AGR400 (Q2C Spine)	S9510-28DC / CSR440 (Q2A Multiservice Edge)	S9600-72XC / S9600-102XC / S9610-46DX / AGR420 (Q2C Multiservice Edge 4q, 1q, NAT 4q, NAT 1q)	S9500-22XST (QAX L2 Wholesale (L2BSA))
destination-ipv4-prefix	Yes	No	Yes	Yes	No
destination-ipv4-prefix-list	Yes	No	Yes	Yes	No
destination-l4-port	Yes	No	Yes	Yes	No
direction egress	No	No	No	No	No

MF L3v4 ACL Match	S9600-72XC / S9600-102XC / AGR420 (Q2C Access Leaf)	S9600-32X / AGR400 (Q2C Spine)	S9510-28DC / CSR440 (Q2A Multiservice Edge)	S9600-72XC / S9600-102XC / S9610-46DX / AGR420 (Q2C Multiservice Edge 4q, 1q, NAT 4q, NAT 1q)	S9500-22XST (QAX L2 Wholesale (L2BSA))
direction ingress	Yes	No	Yes	Yes	No
forward-class	No	No	Yes	No	No
ip-protocol	No	No	Yes	No	No
ipv4-dscp	Yes	No	Yes	Yes	No
ipv4-tos	Yes	No	Yes	Yes	No
mpls-traffic	No	No	No	No	No
source-ipv4-prefix	Yes	No	Yes	Yes	No
source-ipv4-prefix-list	Yes	No	Yes	Yes	No
source-l4-port	Yes	No	Yes	Yes	No

Action Matrix

MF L3v4 ACL Action	S9600-72XC / S9600-102XC / AGR420 (Q2C Access Leaf)	S9600-32X / AGR400 (Q2C Spine)	S9510-28DC / CSR440 (Q2A Multiservice Edge)	S9600-72XC / S9600-102XC / S9610-46DX / AGR420 (Q2C Multiservice Edge 4q, 1q, NAT 4q, NAT 1q)	S9500-22XST (QAX L2 Wholesale (L2BSA))
forward-class	Yes	No	Yes	Yes	No
remark-codepoint	Yes	No	Yes	Yes	No
remark-dscp-codepoint	Yes	No	No	Yes	No

2.7.5. Multifield Classifier (MF) L3v6 ACL

Match Criteria

MF L3v6 ACL Match	S9600-72XC / S9600-102XC / AGR420 (Q2C Access Leaf)	S9600-32X / AGR400 (Q2C Spine)	S9510-28DC / CSR440 (Q2A Multiservice Edge)	S9600-72XC / S9600-102XC / S9610-46DX / AGR420 (Q2C Multiservice Edge 4q,1q, NAT 4q, NAT 1q)	S9500-22XST (QAX L2 Wholesale (L2BSA))
destination-ipv6-prefix	Yes	No	Yes	Yes	No
destination-ipv6-prefix-list	Yes	No	Yes	Yes	No
destination-l4-port	Yes	No	Yes	Yes	No
direction egress	No	No	No	No	No
direction ingress	Yes	No	Yes	Yes	No
forward-class	No	No	No	No	No
ip-protocol	No	No	Yes	No	No
ipv6-tc	Yes	No	Yes	Yes	No
mpls-traffic	No	No	No	No	No
source-ipv6-prefix	Yes	No	Yes	Yes	No
source-ipv6-prefix-list	Yes	No	Yes	Yes	No
source-l4-port	Yes	No	Yes	Yes	No

Action Matrix

MF L3v6 ACL Action	S9600-72XC / S9600-102XC / AGR420 (Q2C Access Leaf)	S9600-32X / AGR400 (Q2C Spine)	S9510-28DC / CSR440 (Q2A Multiservice Edge)	S9600-72XC / S9600-102XC / S9610-46DX / AGR420 (Q2C Multiservice Edge 4q,1q, NAT 4q, NAT 1q)	S9500-22XST (QAX L2 Wholesale (L2BSA))
forward-class	Yes	No	Yes	Yes	No
remark-codepoint	Yes	No	Yes	Yes	No
remark-dscp-codepoint	Yes	No	No	Yes	No